Special Function Switch

EX-22H01 (N)

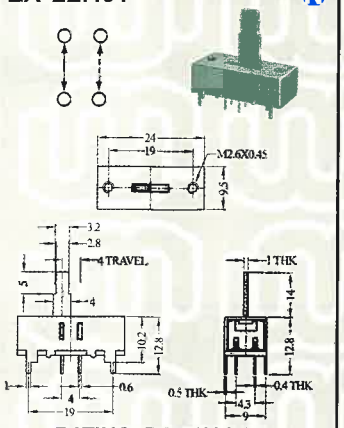

RATING: DC 50V 0.3A

EX-44P01 (N)

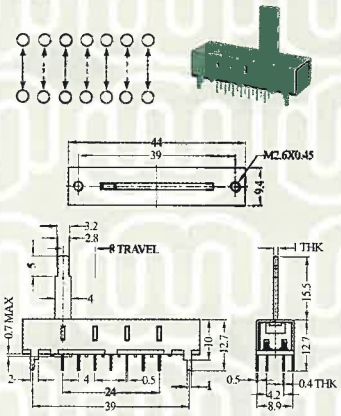

RATING: DC 50V 0.3A

PSK-23D09 (S)

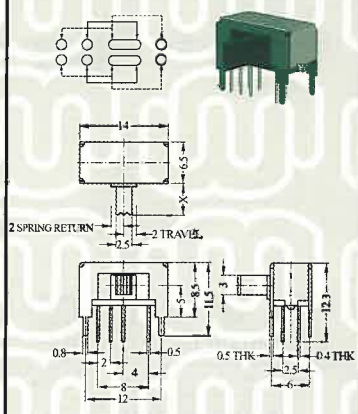

RATING: DC 50V 0.3A

PS-11B-SK13D02 (N)

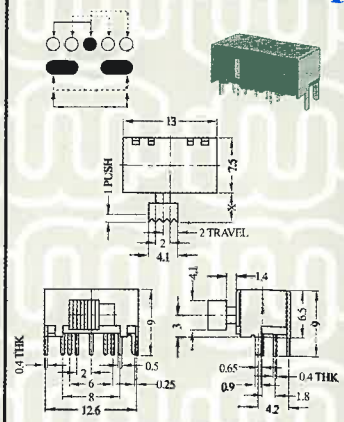

RATING: DC 50V 0.3A

EX-33H01 (N)

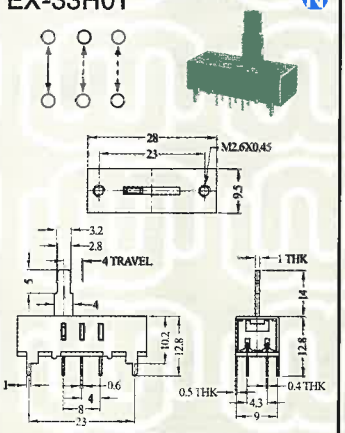

RATING: DC 50V 0.3A

EX-55H01 (N)

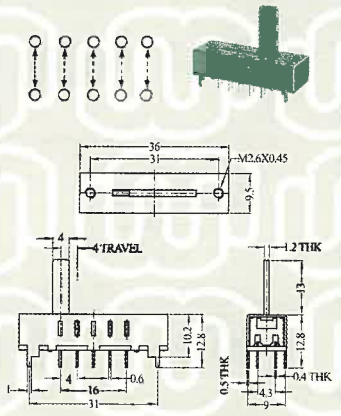

RATING: DC 50V 0.3A

PSK-23E01 (S)

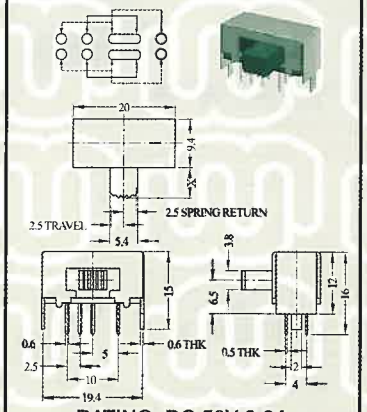

RATING: DC 50V 0.3A

PS-11B-SK13D03 (N)

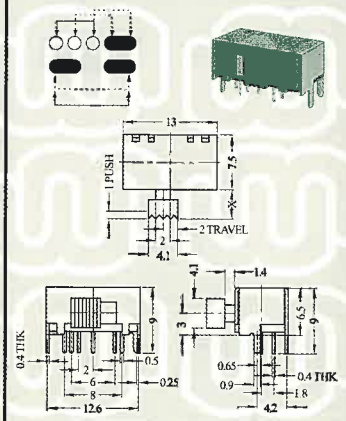

RATING: DC 50V 0.3A

EX-44F01 (S)

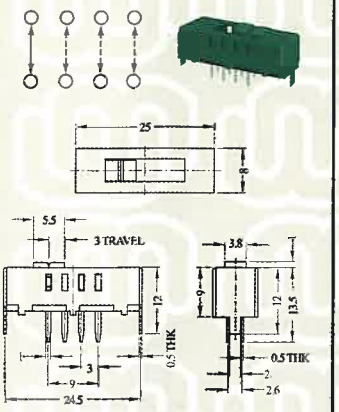

RATING: DC 50V 0.3A

PSS-23E07 (S)

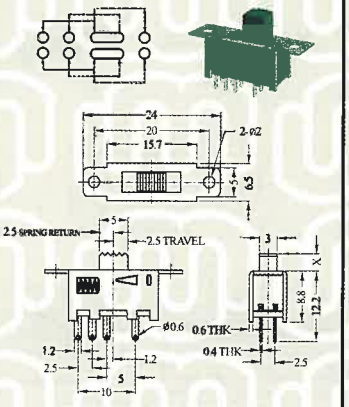

RATING: DC 50V 0.3A

PS-12I03 (N)

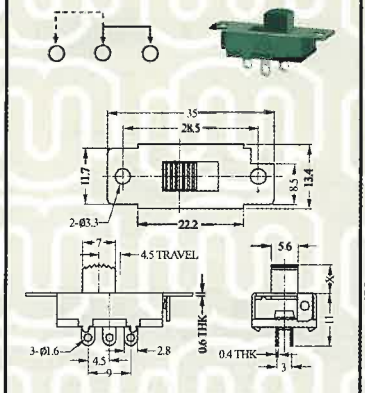

RATING: AC 250V 1.5A

DL-001

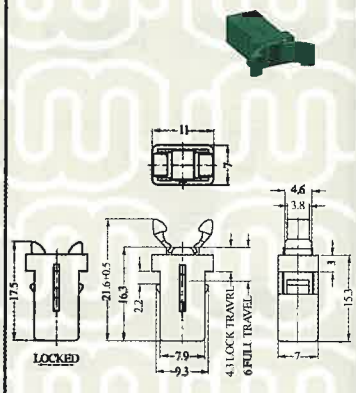

EX-44H01 (N)

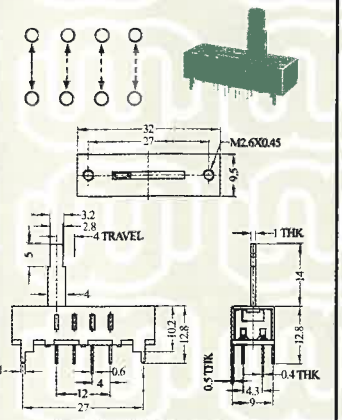

RATING: DC 50V 0.3A

PSS-23E08 (S)

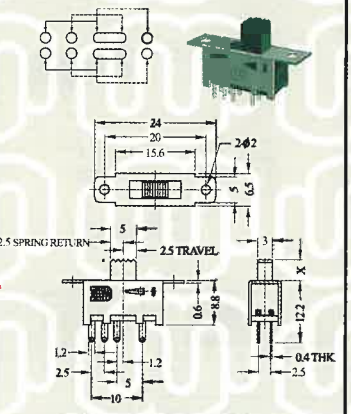

RATING: DC 50V 0.3A

PS-11B-SK13D01 (N)

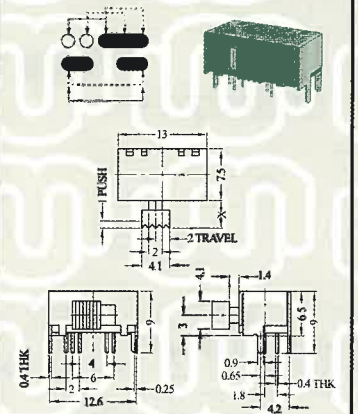

RATING: DC 50V 0.3A

(S) SHORTING (N) NON-SHORTING

版權所有 翻印必究 ALL RIGHTS RESERVED

Bottom Slide Switch

BK-22F01 (S)

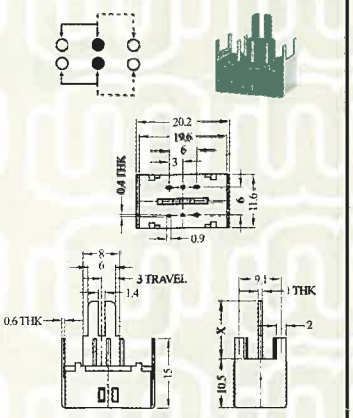

RATING: DC 50V 0.3A

BK-22H05 (N)

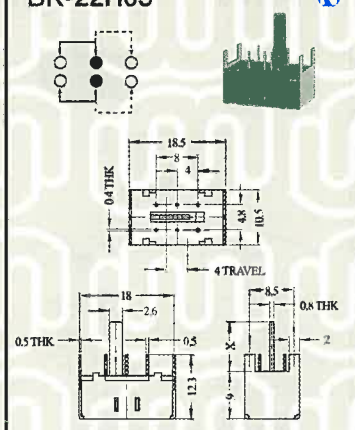

RATING: DC 50V 0.3A

BK-23D04 (S)

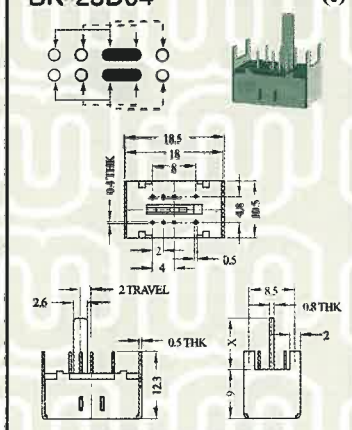

RATING: DC 50V 0.3A

BK-62H01 (T)

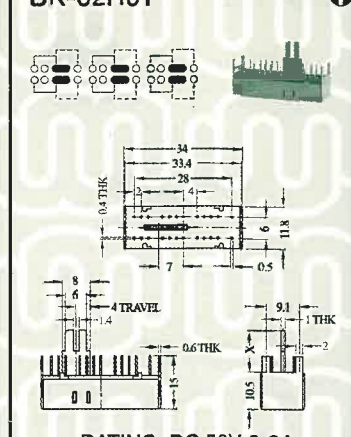

RATING: DC 50V 0.3A

BK-22H01 (N)

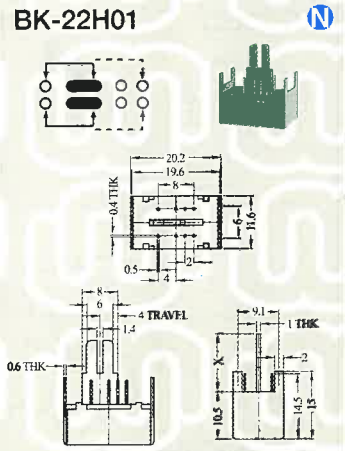

RATING: DC 50V 0.3A

BK-22H13 (S)

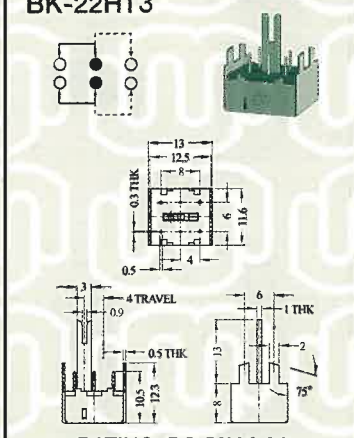

RATING: DC 50V 0.3A

BK-24D01 (S)

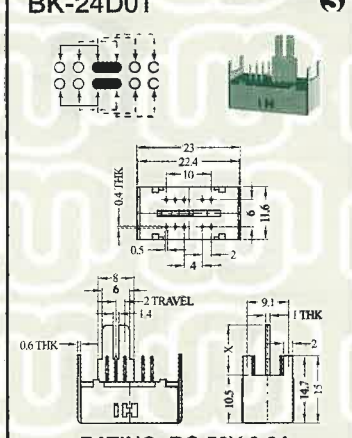

RATING: DC 50V 0.3A

BK-63D01 (S)

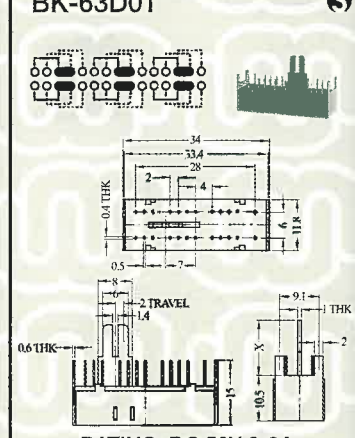

RATING: DC 50V 0.3A

BK-22H02 (N)

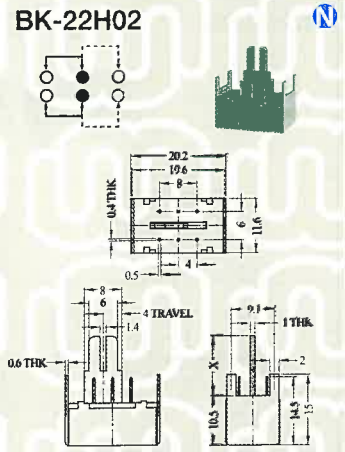

RATING: DC 50V 0.3A

BK-23D01 (S)

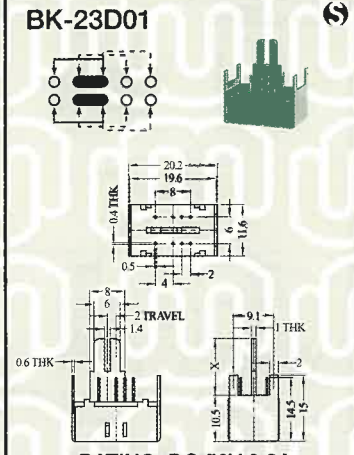

RATING: DC 50V 0.3A

BK-42H01 (T)

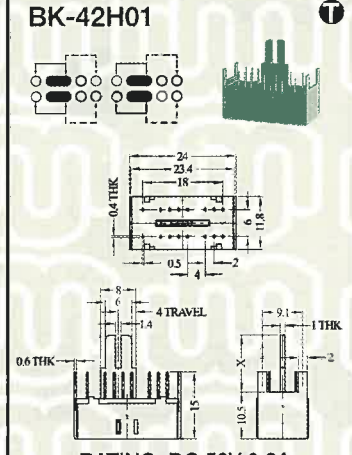

RATING: DC 50V 0.3A

BK-22H03 (N)

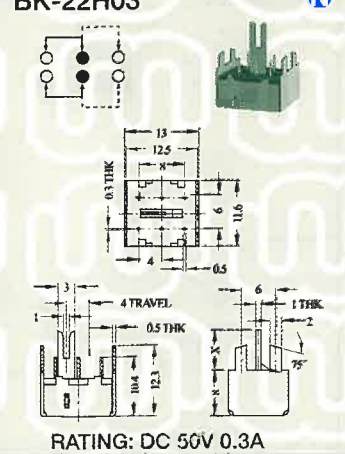

RATING: DC 50V 0.3A

BK-23D03 (S)

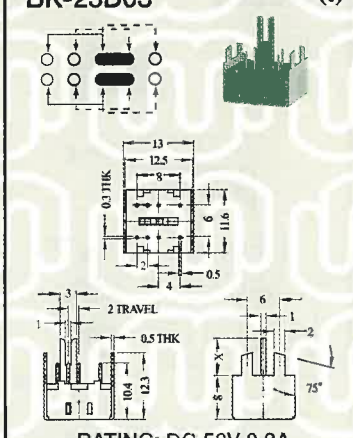

RATING: DC 50V 0.3A

BK-43D01 (S)

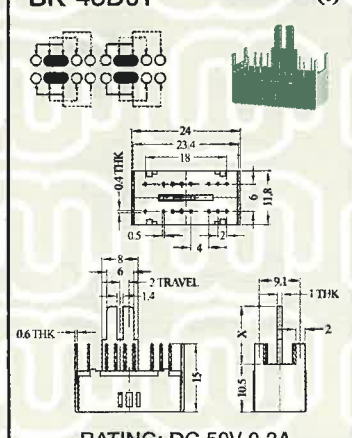

RATING: DC 50V 0.3A

(S) SHORTING (N) NON-SHORTING (T) NOT-SPECIFIED

版權所有 翻印必究 ALL RIGHTS RESERVED

Rocker Switch / Toggle Switch

RS-1122

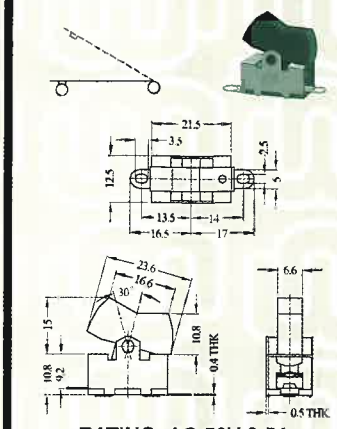

RATING: AC 50V 0.5A

RS-1138

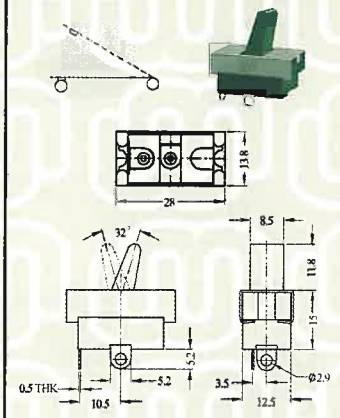

RATING: AC 50V 0.5A

TS-22E01 (S)

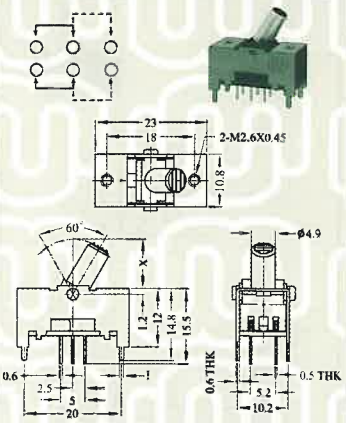

RATING: DC 50V 0.3A

TS-22J05 (N)

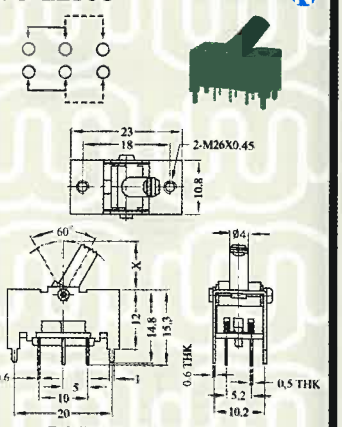

RATING: DC 50V 0.3A

RS-1132

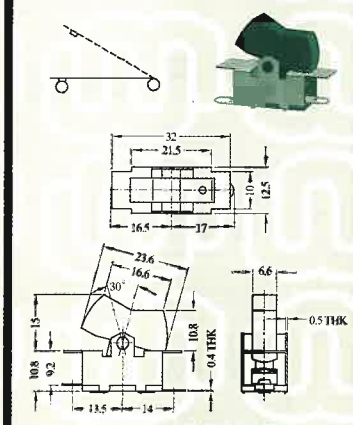

RATING: AC 50V 0.5A

RS-1139

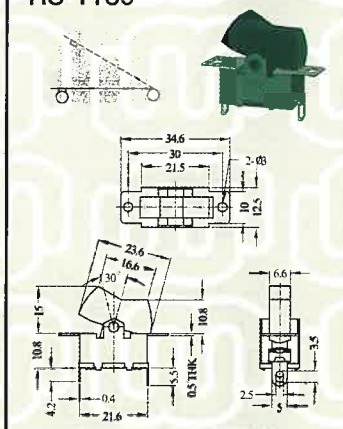

RATING: DC 12V 6A

TS-22E04 (N)

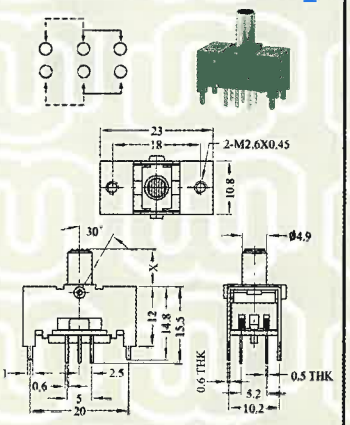

RATING: DC 50V 0.3A

TS-23E01 (S)

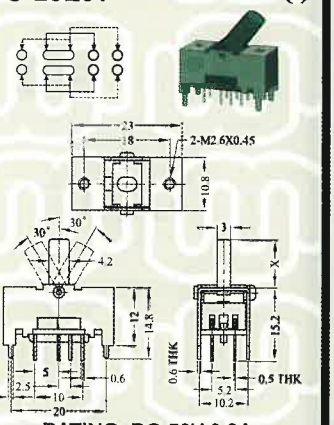

RATING: DC 50V 0.3A

RS-1135

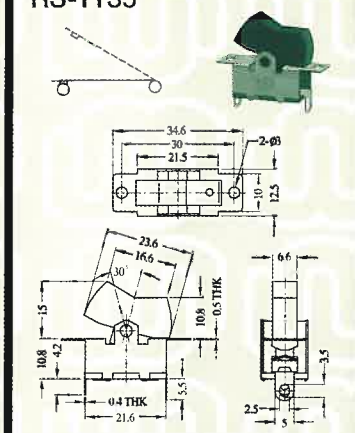

RATING: AC 50V 0.5A

RS-1145

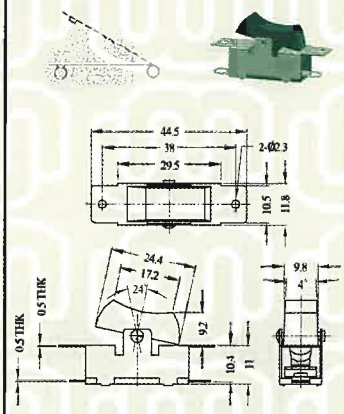

RATING: AC 50V 0.5A

TS-22E05 (S)

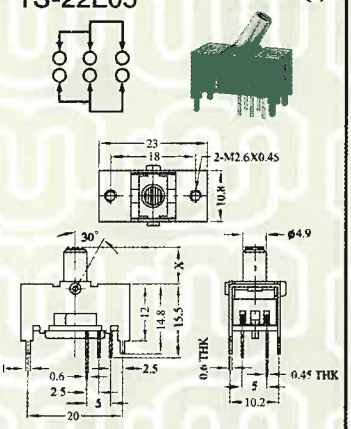

RATING: DC 50V 0.3A

TS-23E02 (S)

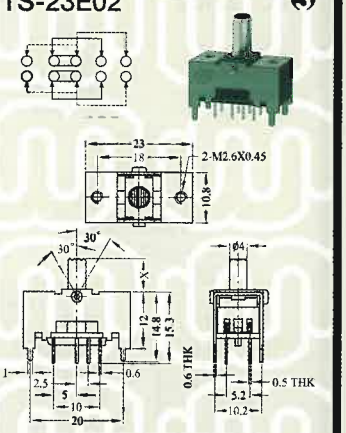

RATING: DC 50V 0.3A

RS-1136

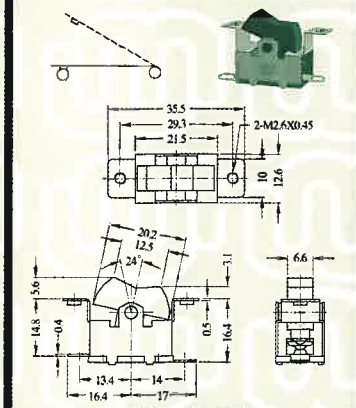

RATING: AC 50V 0.5A

RS-1220

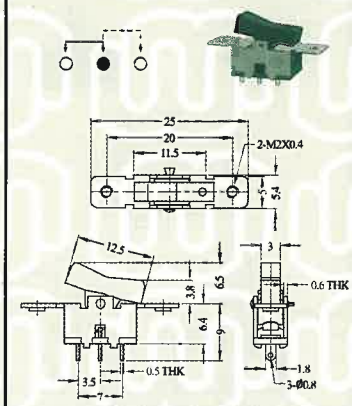

RATING: AC 50V 0.5A

TS-22J03 (S)

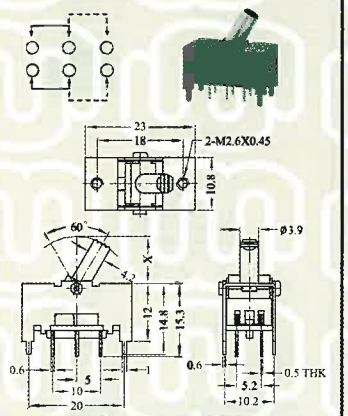

RATING: DC 50V 0.3A

TS-23E06 (S)

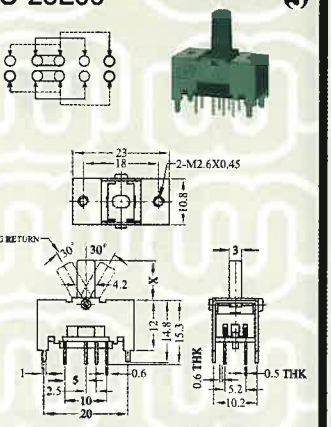

RATING: DC 50V 0.3A

(S) SHORTING (N) NON-SHORTING

版權所有 翻印必究 ALL RIGHTS RESERVED

Toggle Switch

TS-42E05 (N)

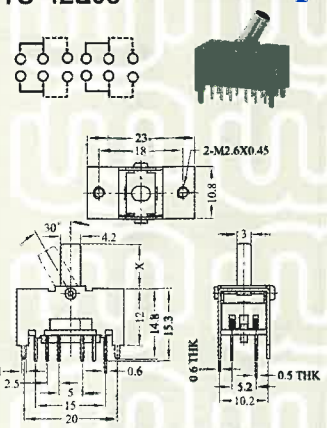

RATING: DC 50V 0.3A

TS-43E01 (S)

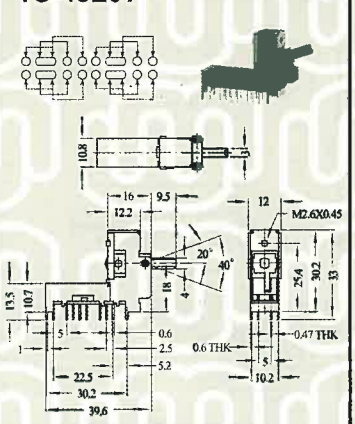

RATING: DC 50V 0.3A

TS-63E01 (S)

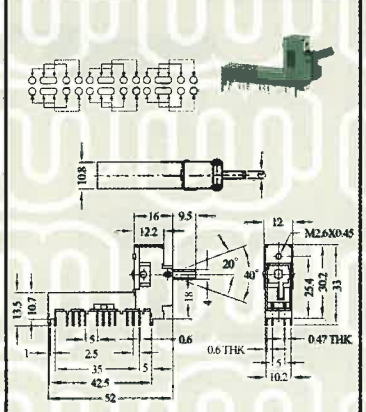

RATING: DC 50V 0.3A

NS-42E02 (N)

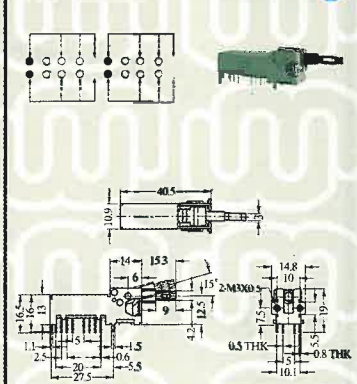

RATING: DC 50V 0.3A

TS-42E06 (N)

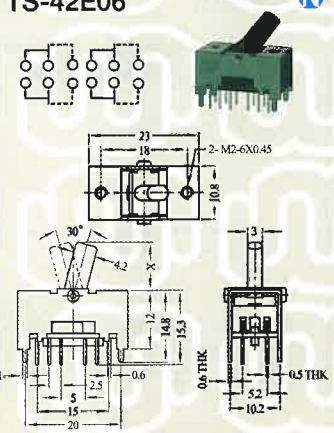

RATING: DC 50V 0.3A

TS-43E03 (S)

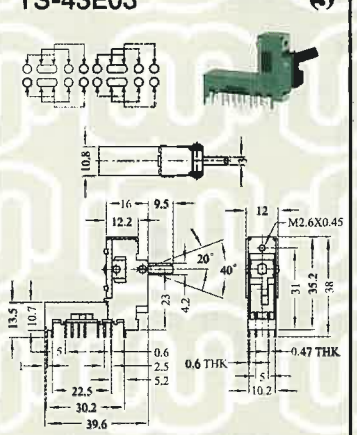

RATING: DC 50V 0.3A

TS-63E03 (S)

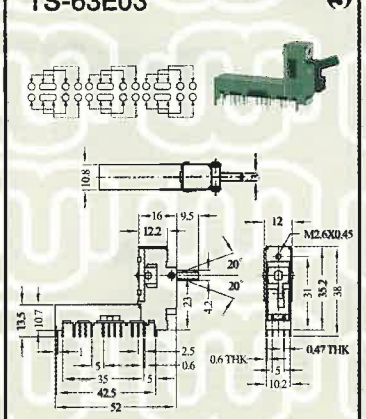

RATING: DC 50V 0.3A

NS-42J01 (N)

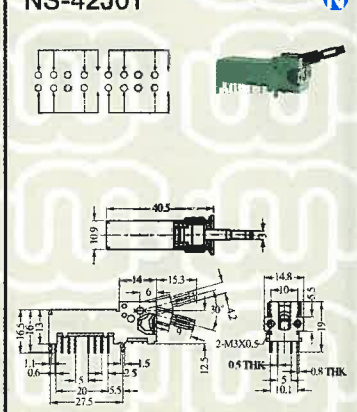

RATING: DC 50V 0.3A

TS-42J01 (S)

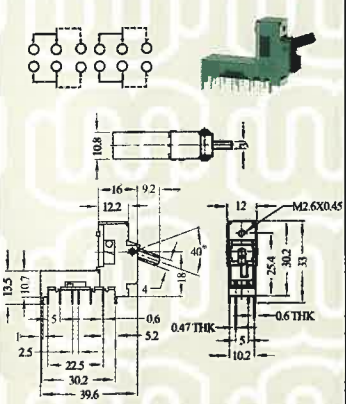

RATING: DC 50V 0.3A

TS-62J01 (S)

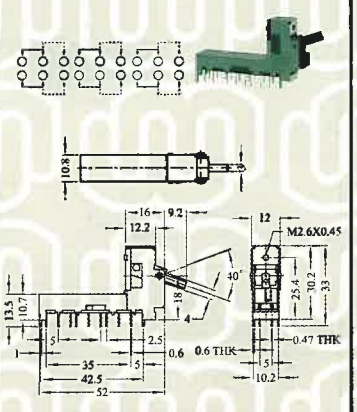

RATING: DC 50V 0.3A

TS-84E01 (S)

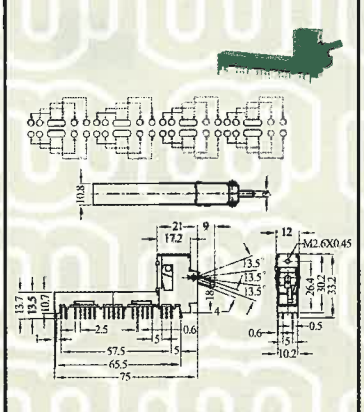

RATING: DC 50V 0.3A

NS-42J03 (N)

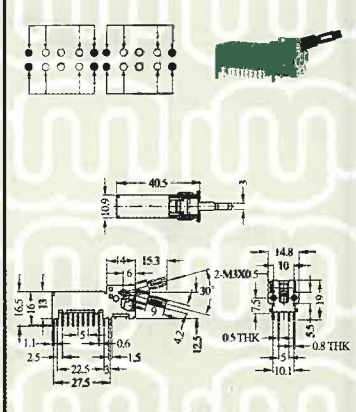

RATING: DC 50V 0.3A

TS-42J03 (S)

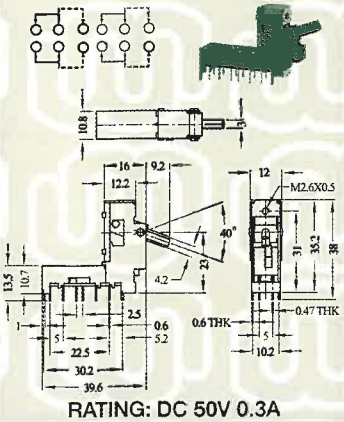

RATING: DC 50V 0.3A

TS-62J03 (S)

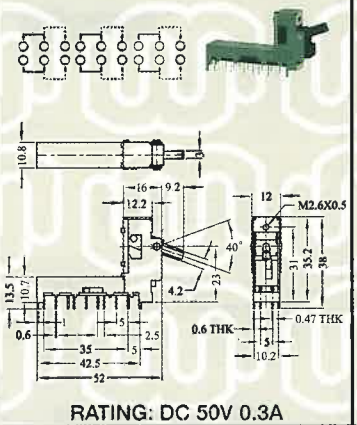

RATING: DC 50V 0.3A

TS-84E03 (S)

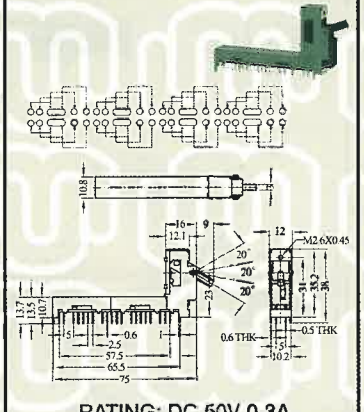

RATING: DC 50V 0.3A

NS-43E01 (N)

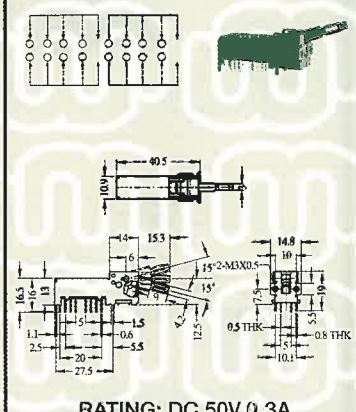

RATING: DC 50V 0.3A

版權所有 翻印必究 ALL RIGHTS RESERVED

Toggle Switch

NS-62J01 (N)

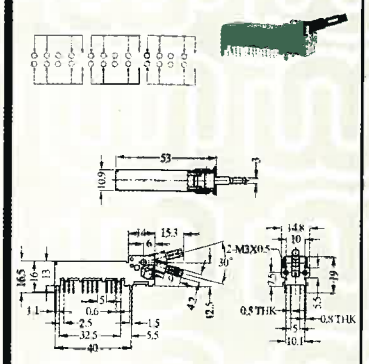

RATING: DC 50V 0.3A

NS-84E01 (N)

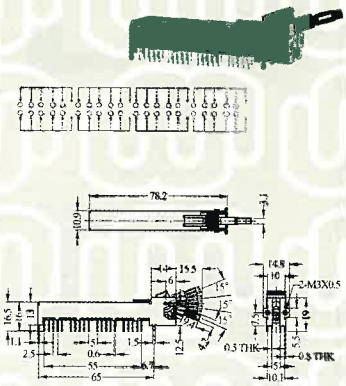

RATING: DC 50V 0.3A

LS-43E01 (N)

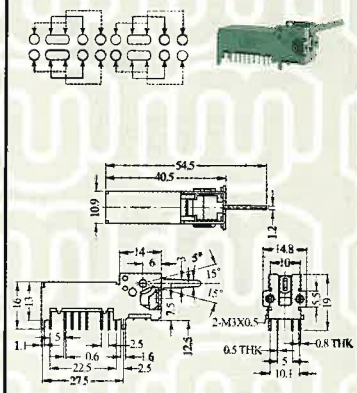

RATING: DC 50V 0.3A

LS-83D01 (N)

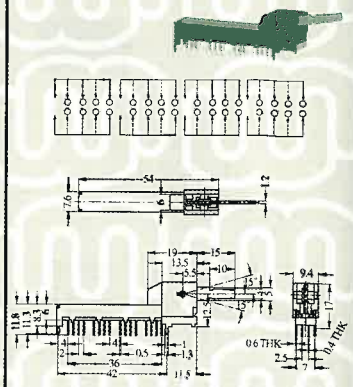

RATING: DC 50V 0.3A

NS-62J03 (N)

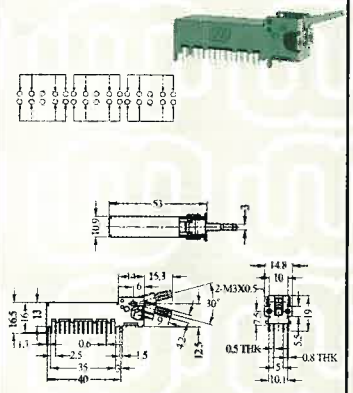

RATING: DC 50V 0.3A

NS-84E02 (N)

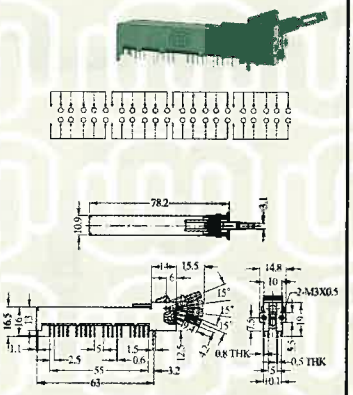

RATING: DC 50V 0.3A

LS-43E11 (S)

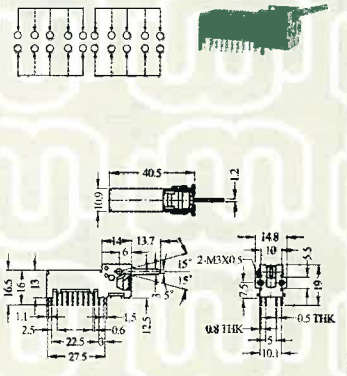

RATING: DC 50V 0.3A

LS-83E01 (N)

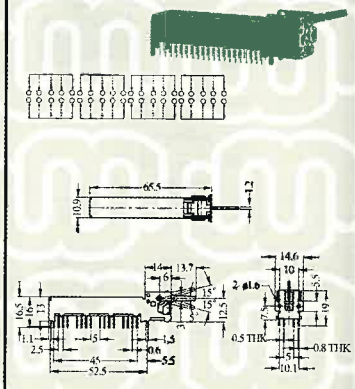

RATING: DC 50V 0.3A

NS-63E01 (N)

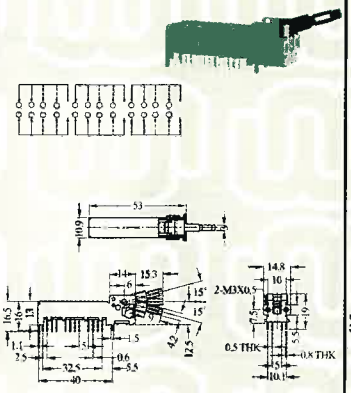

RATING: DC 50V 0.3A

LS-24D01 (S)

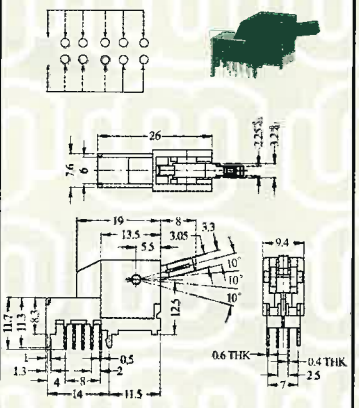

RATING: DC 50V 0.3A

LS-62J01 (S)

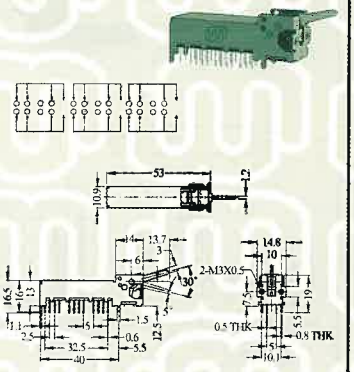

RATING: DC 50V 0.3A

NS-63E03 (N)

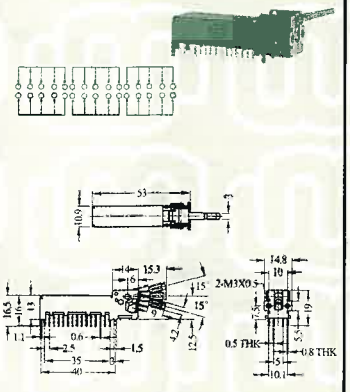

RATING: DC 50V 0.3A

LS-42J01 (N)

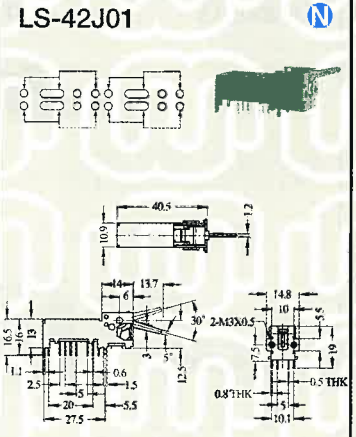

RATING: DC 50V 0.3A

LS-63E01 (N)

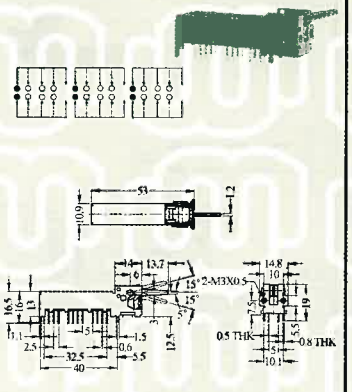

RATING: DC 50V 0.3A

(S) SHORTING (N) NON-SHORTING

版權所有 翻印必究 ALL RIGHTS RESERVED

Push Switch

PS-11A02

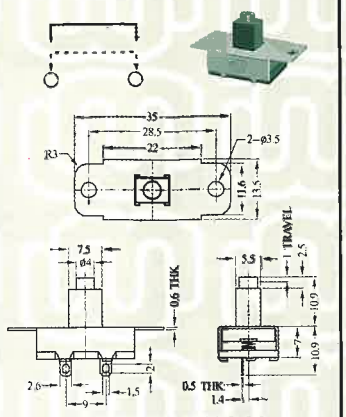

RATING: DC 50V 0.3A

PS-12E03 (N)

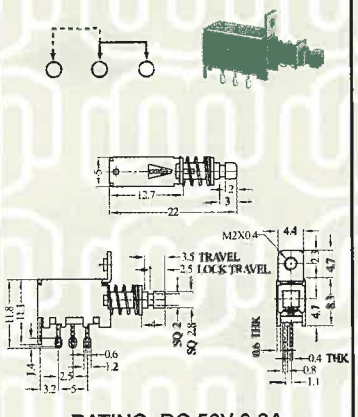

RATING: DC 50V 0.3A

PS-12E15 (N)

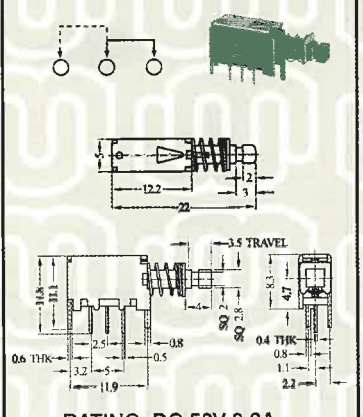

RATING: DC 50V 0.3A

PS-12F04 (N)

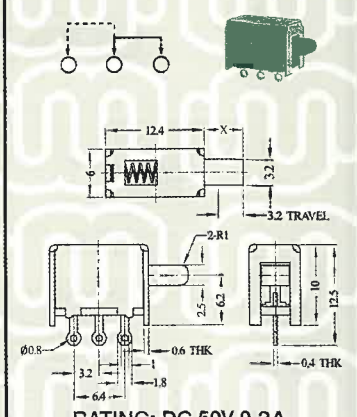

RATING: DC 50V 0.3A

PS-11A03

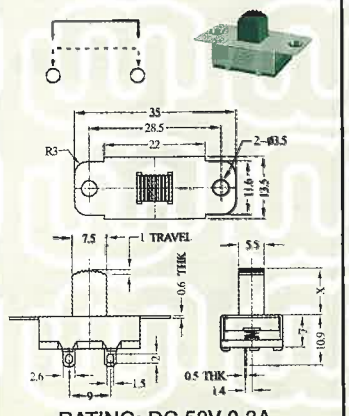

RATING: DC 50V 0.3A

PS-12E05 (N)

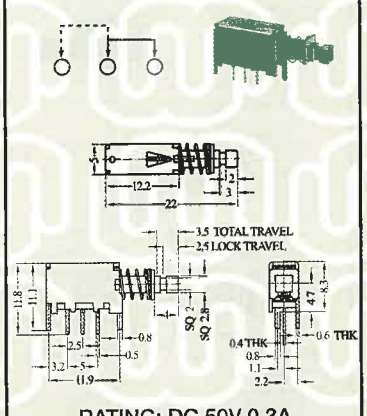

RATING: DC 50V 0.3A

PS-12E21 (N)

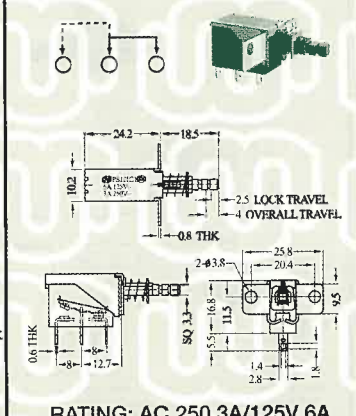

RATING: AC 250 3A/125V 6A

PS-12F14 (N)

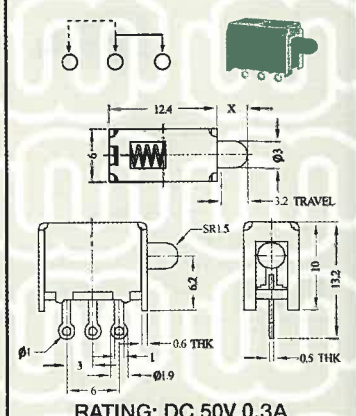

RATING: DC 50V 0.3A

PS-11E01 (N)

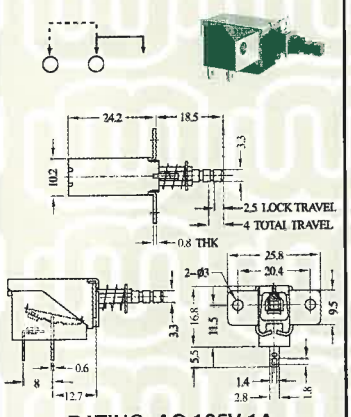

RATING: AC 125V 1A

PS-12E06 (N)

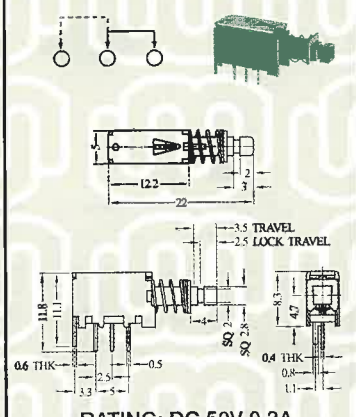

RATING: DC 50V 0.3A

PS-12F01 (N)

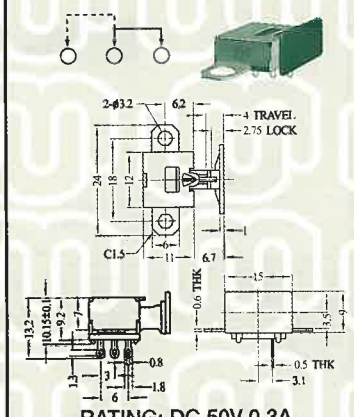

RATING: DC 50V 0.3A

PS-22D02 (S)(N)

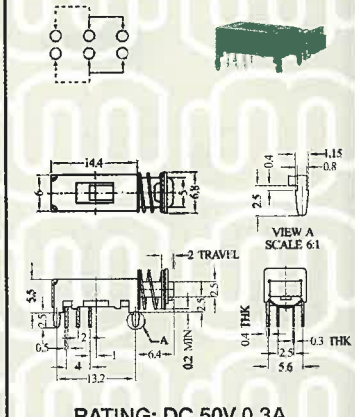

RATING: DC 50V 0.3A

PS-12E01 (N)

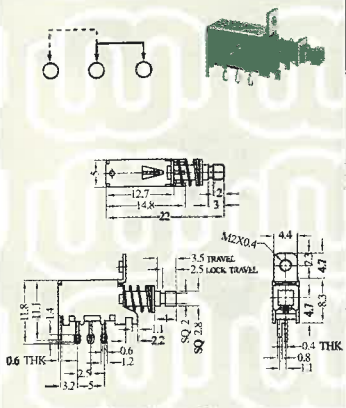

RATING: DC 50V 0.3A

PS-12E10 (N)

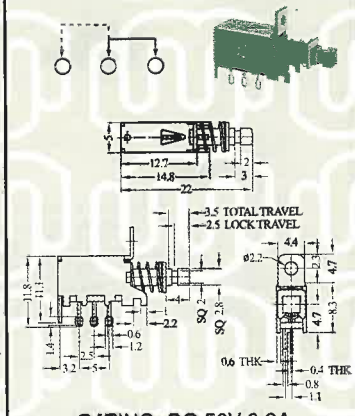

RATING: DC 50V 0.3A

PS-12F03 (S)

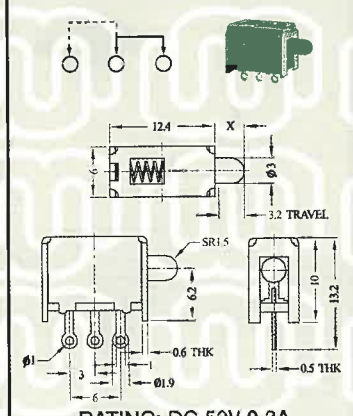

RATING: DC 50V 0.3A

PS-22D12 (N)

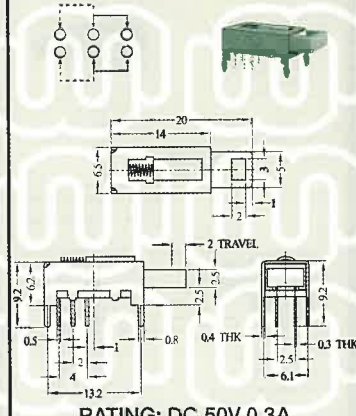

RATING: DC 50V 0.3A

版權所有 翻印必究 ALL RIGHTS RESERVED

Push Switch

PS-22E02 (N)

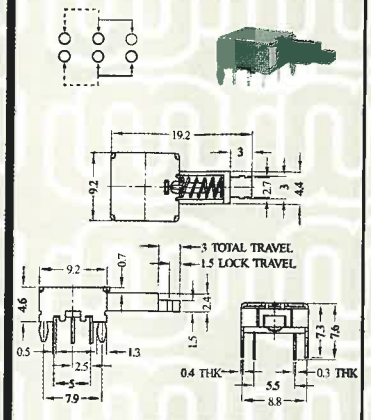

RATING: DC 50V 0.3A

PS-22F04 (N)

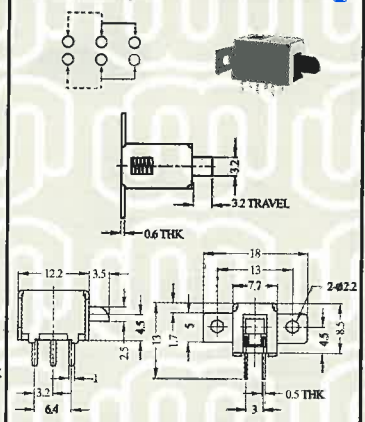

RATING: DC 50V 0.3A

PS-22F09/10 (N)

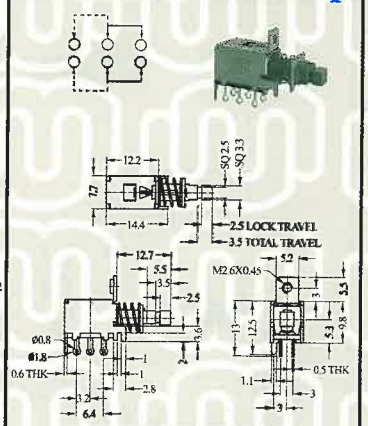

RATING: DC 50V 0.3A

PS-22F16/19 (N)

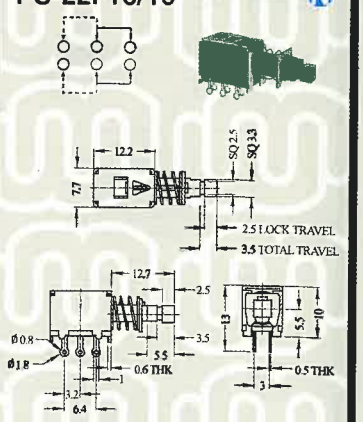

RATING: DC 50V 0.3A

PS-22E05 (N)

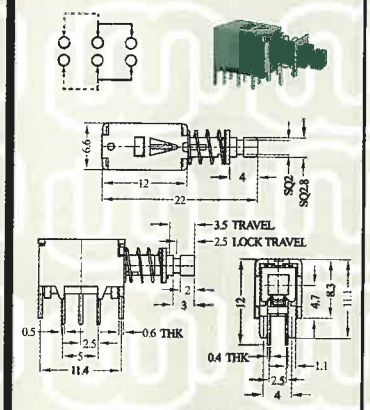

RATING: DC 50V 0.3A

PS-22F05 (N)

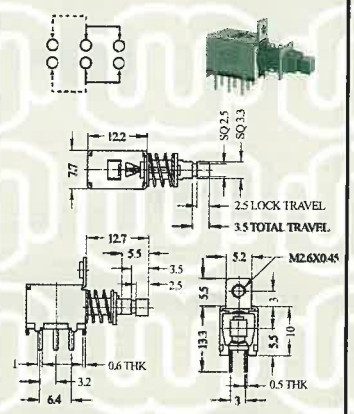

RATING: DC 50V 0.3A

PS-22F11/13 (N)

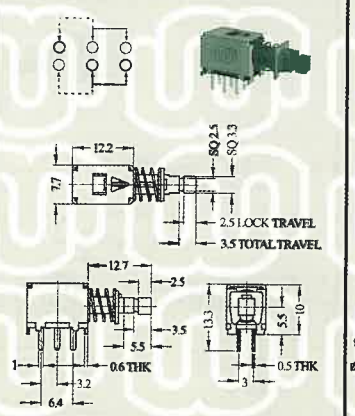

RATING: AC 250V 1.5A

PS-22F17 (N)

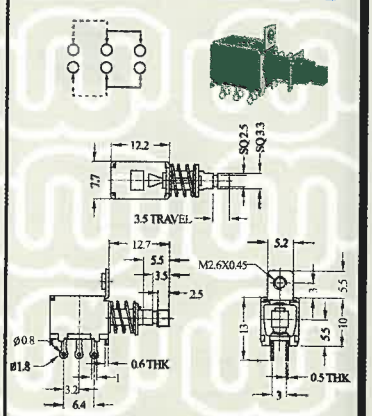

RATING: DC 50V 0.3A

PS-22F01 (N)

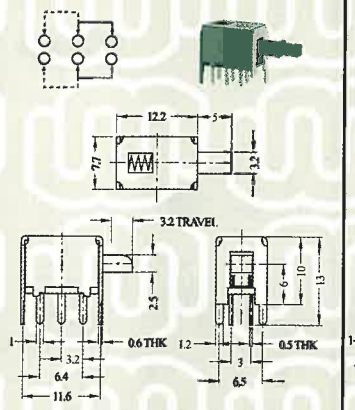

RATING: DC 50V 0.3A

PS-22F06 (N)

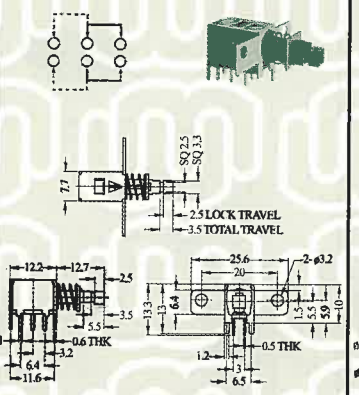

RATING: DC 50V 0.3A

PS-22F14 (N)

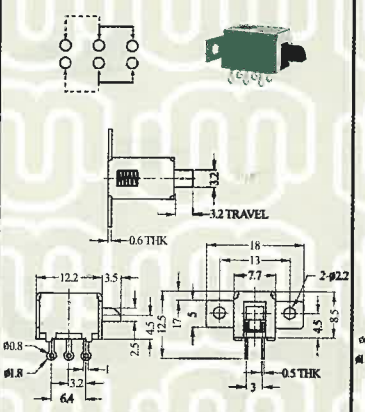

RATING: DC 50V 0.3A

PS-22F18 (N)

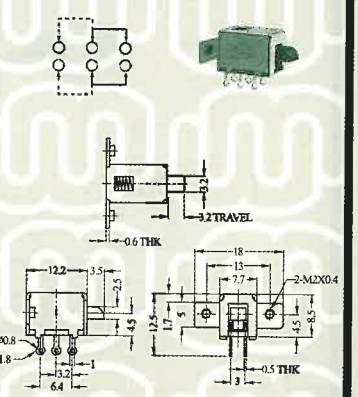

RATING: DC 50V 0.3A

PS-22F02/03 (N)

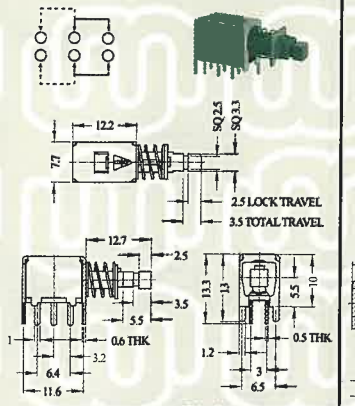

RATING: DC 50V 0.3A

PS-22F08 (N)

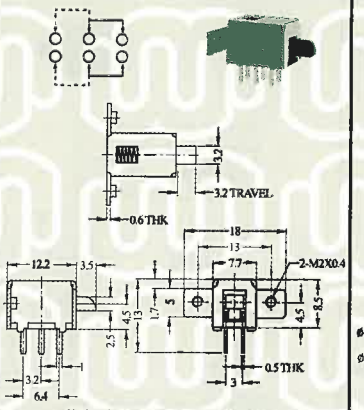

RATING: DC 50V 0.3A

PS-22F15 (N)

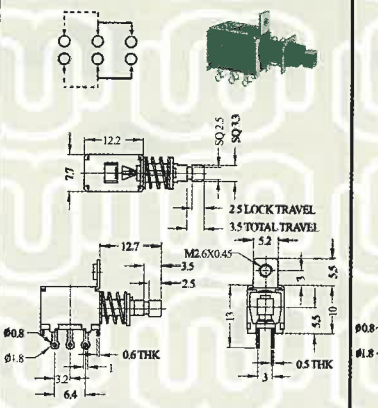

RATING: DC 50V 0.3A

PS-22F20 (N)

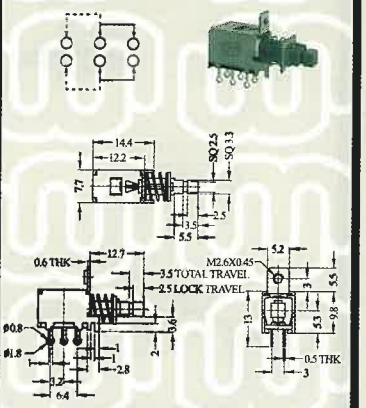

RATING: DC 50V 0.3A

版權所有 翻印必究 ALL RIGHTS RESERVED

Push Switch

PS-22F21

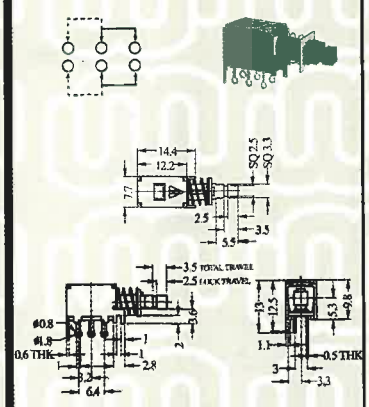

RATING: DC 50V 0.3A

PS-22F27

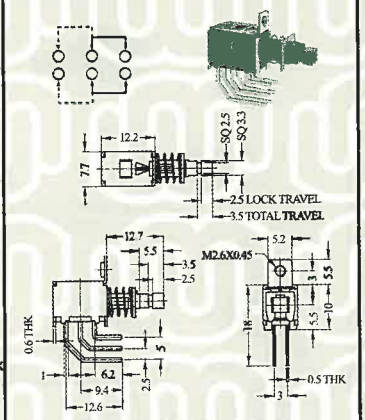

RATING: DC 50V 0.3A

PS-22F33/35

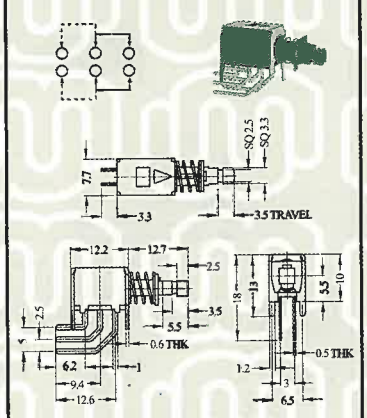

RATING: DC 50V 0.3A

PS-22F39

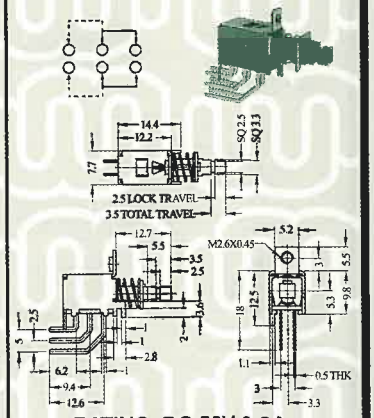

RATING: DC 50V 0.3A

PS-22F22

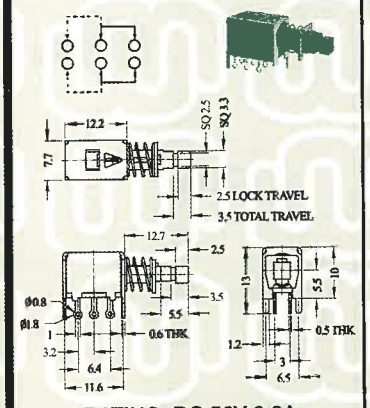

RATING: DC 50V 0.3A

PS-22F28

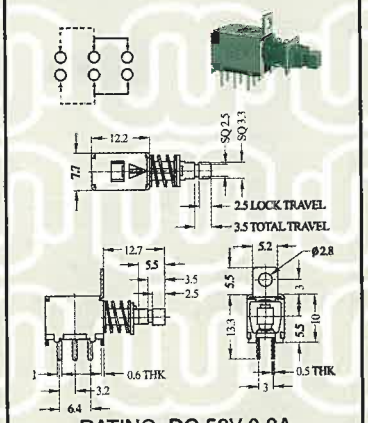

RATING: DC 50V 0.3A

PS-22F36

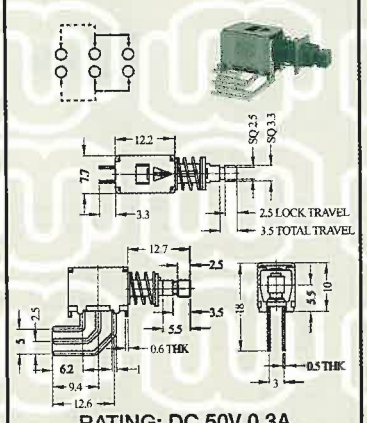

RATING: DC 50V 0.3A

PS-22F40

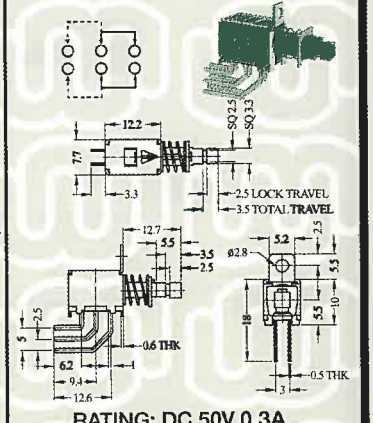

RATING: DC 50V 0.3A

PS-22F25

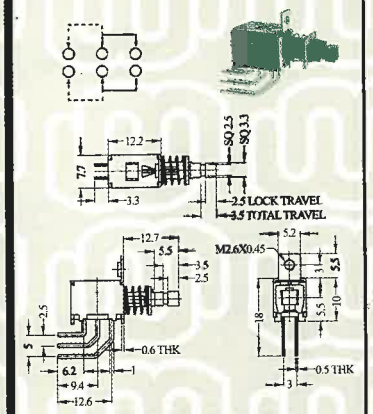

RATING: DC 50V 0.3A

PS-22F29

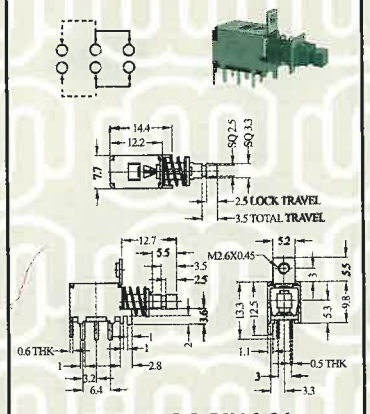

RATING: DC 50V 0.3A

PS-22F37

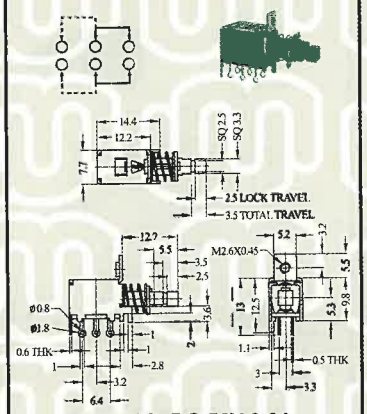

RATING: DC 50V 0.3A

PS-22F41

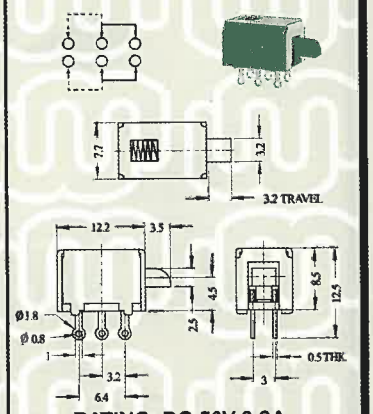

RATING: DC 50V 0.3A

PS-22F26/32

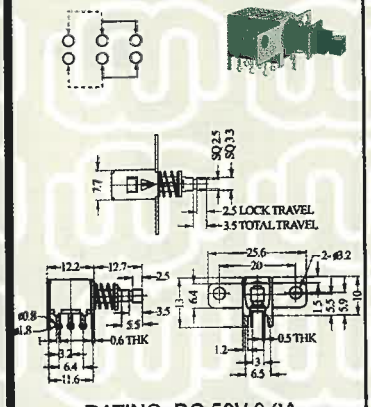

RATING: DC 50V 0.3A

PS-22F31/34

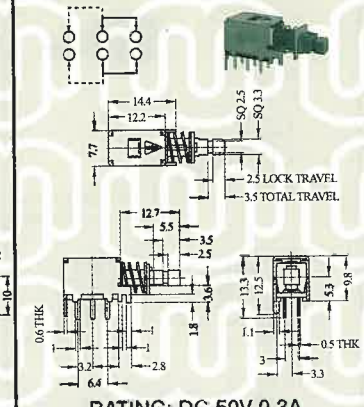

RATING: DC 50V 0.3A

PS-22F38

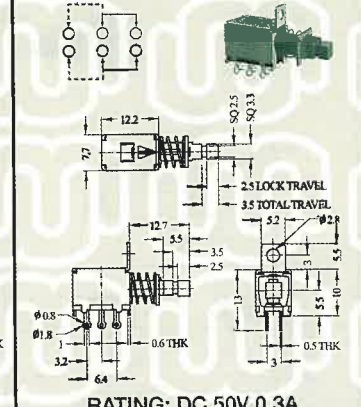

RATING: DC 50V 0.3A

PS-22F43

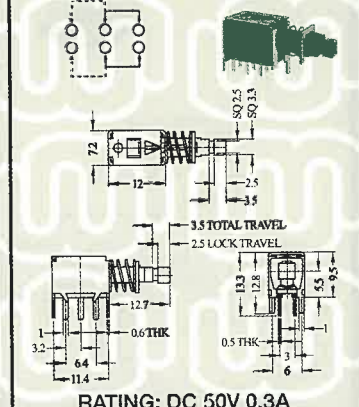

RATING: DC 50V 0.3A

版權所有 翻印必究 ALL RIGHTS RESERVED

Push Switch

PS-22F45 (N)

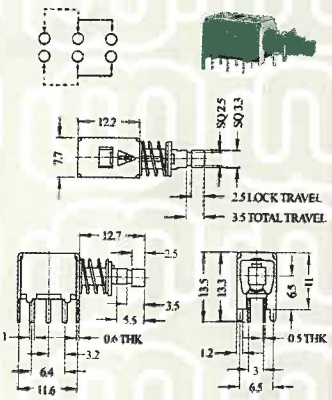

RATING: DC 50V 0.3A

PS-22F49 (N)

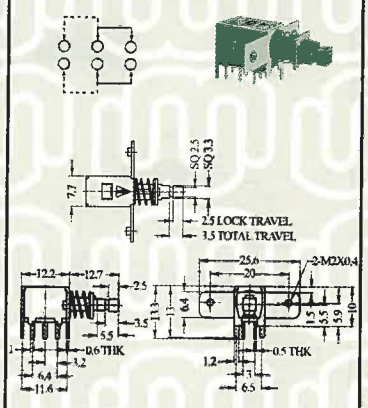

RATING: DC 50V 0.3A

PS-22F56 (N)

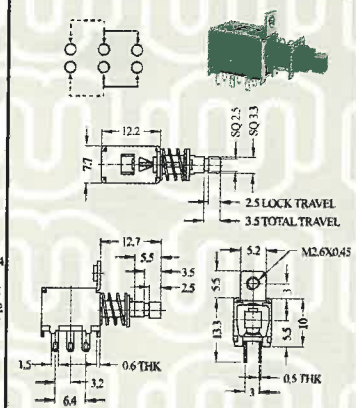

RATING: DC 50V 0.3A

PS-22F62 (N)

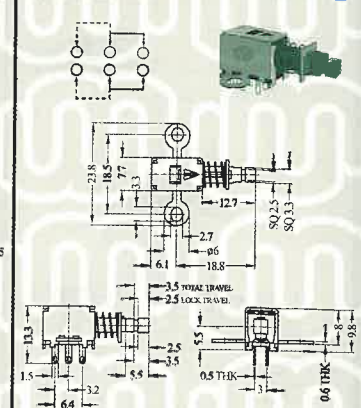

RATING: DC 50V 0.3A

PS-22F46 (N)

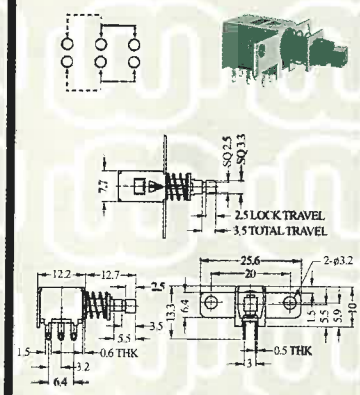

RATING: DC 50V 0.3A

PS-22F50 (N)

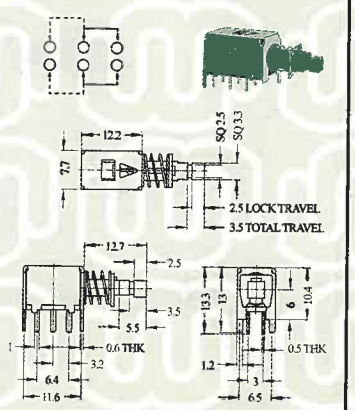

RATING: DC 50V 0.3A

PS-22F58 (N)

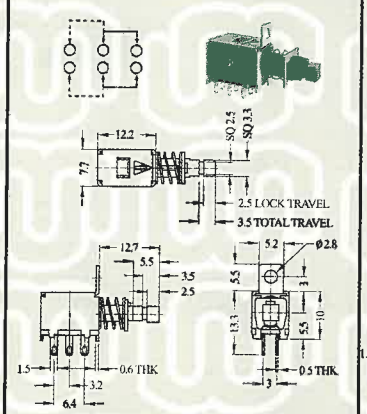

RATING: DC 50V 0.3A

PS-22F66 (N)

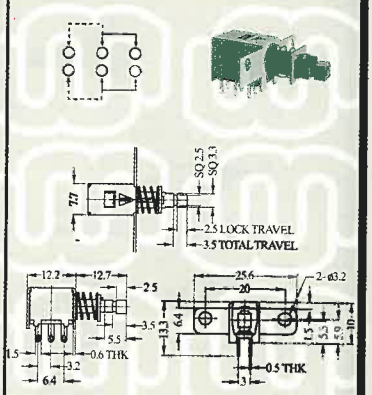

RATING: DC 50V 0.3A

PS-22F47 (N)

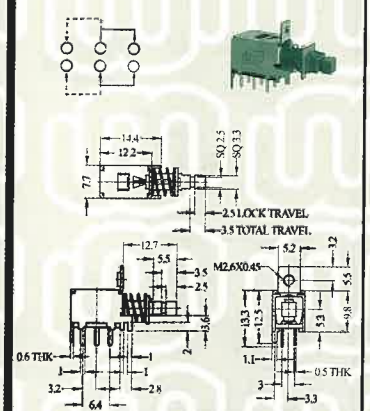

RATING: DC 50V 0.3A

PS-22F52 (N)

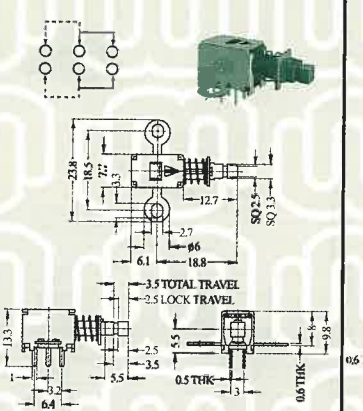

RATING: DC 50V 0.3A

PS-22F59 (N)

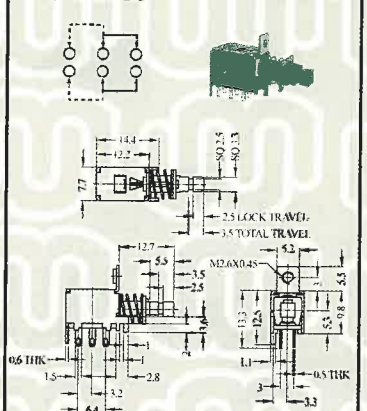

RATING: DC 50V 0.3A

PS-22F68 (N)

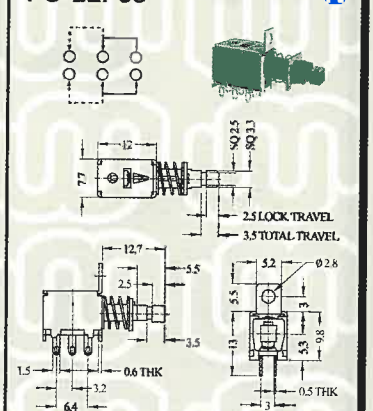

RATING: DC 50V 0.3A

PS-22F48 (N)

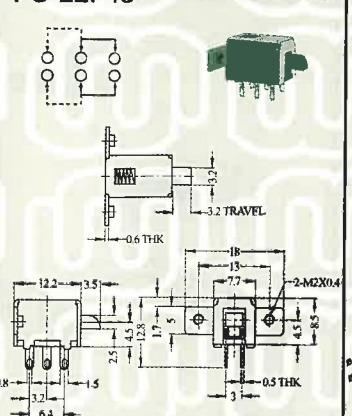

RATING: DC 50V 0.3A

PS-22F54 (N)

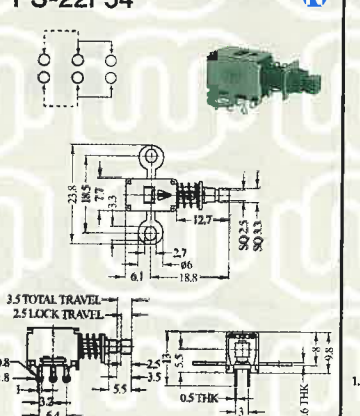

RATING: DC 50V 0.3A

PS-22F60 (N)

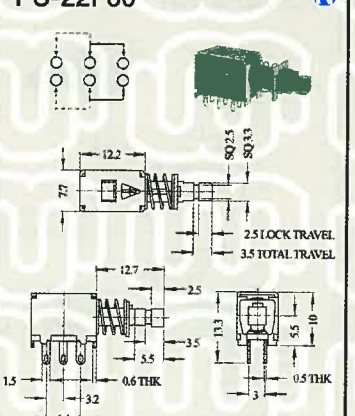

RATING: DC 50V 0.3A

PS-22F91 (N)

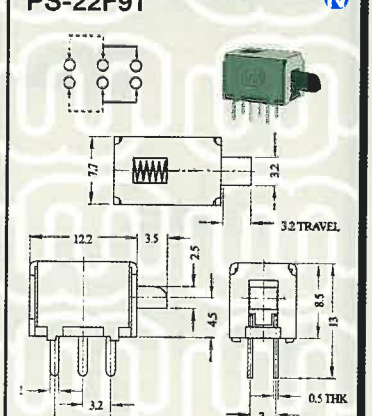

RATING: DC 50V 0.3A

(S) SHORTING (N) NON-SHORTING

版權所有 翻印必究 ALL RIGHTS RESERVED

Push Switch

PS-22F92 (N)

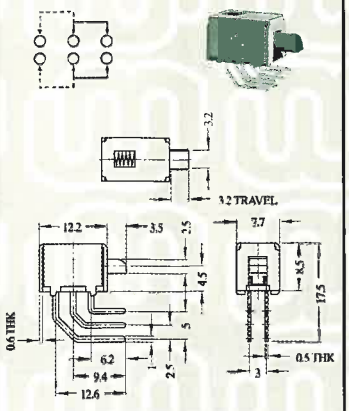

RATING: DC 50V 0.3A

PS-22F201 (N)

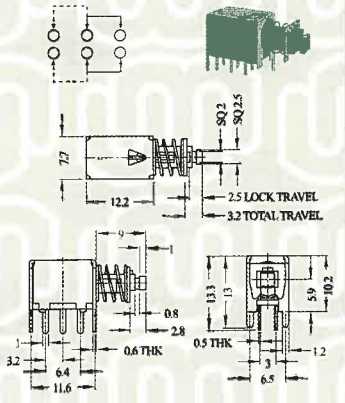

RATING: DC 50V 0.3A

PS-22I48 (N)

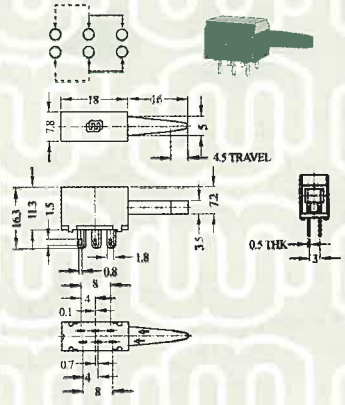

RATING: DC 50V 0.3A

PS-42D06 (N)

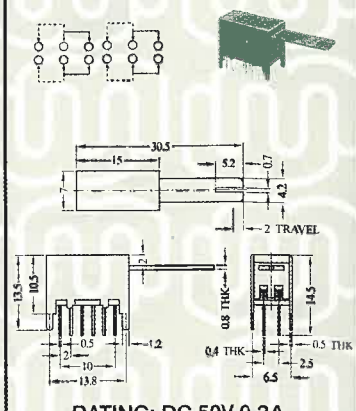

RATING: DC 50V 0.3A

PS-22F93 (N)

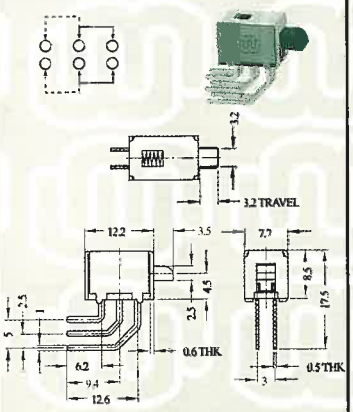

RATING: DC 50V 0.3A

PS-22F202 (N)

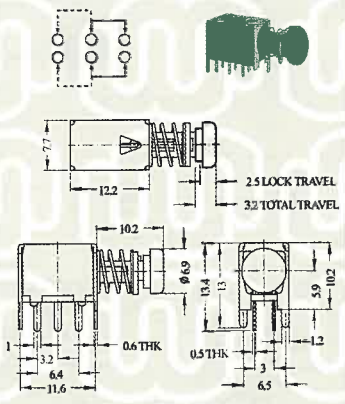

RATING: DC 50V 0.3A

PS-42D01 (S)

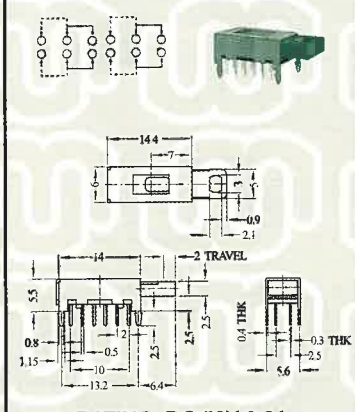

RATING: DC 50V 0.3A

PS-42D11 (N)

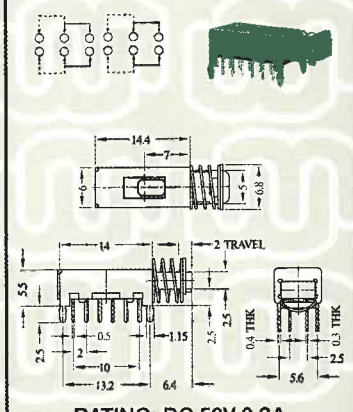

RATING: DC 50V 0.3A

PS-22F94 (N)

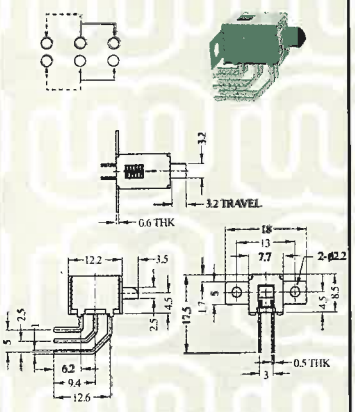

RATING: DC 50V 0.3A

PS-22F301 (N)

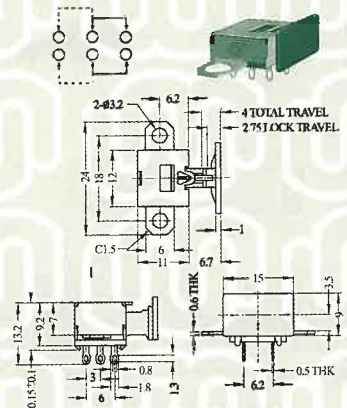

RATING: DC 50V 0.3A

PS-42D02 (S)(N)

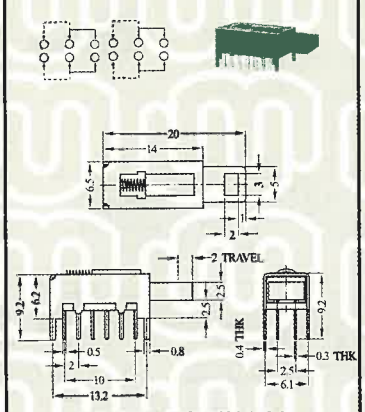

RATING: DC 50V 0.3A

PS-42D22 (N)

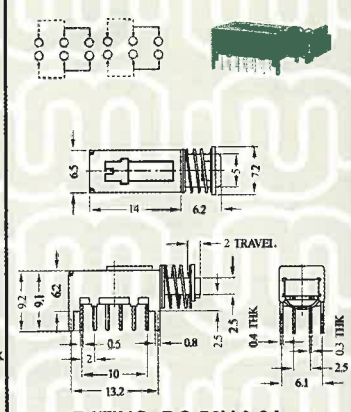

RATING: DC 50V 0.3A

PS-22F98 (N)

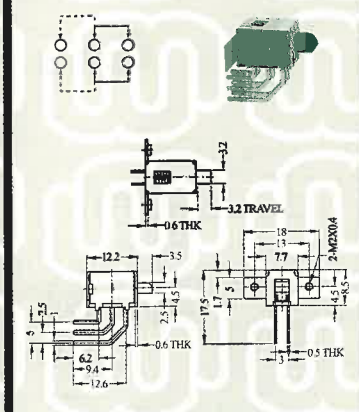

RATING: DC 50V 0.3A

PS-22H01 (N)

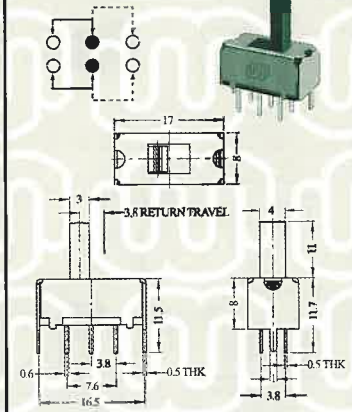

RATING: DC 50V 0.5A

PS-42D04 (N)

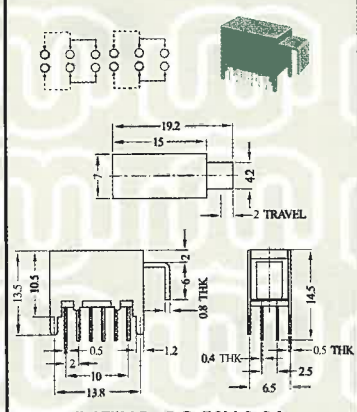

RATING: DC 50V 0.3A

PS-42D24 (N)

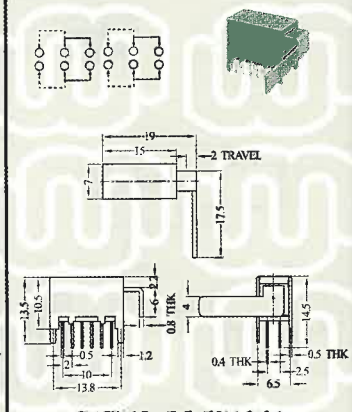

RATING: DC 50V 0.3A

(S) SHORTING (N) NON-SHORTING

版權所有 翻印必究 ALL RIGHTS RESERVED

Push Switch

PS-42D25 (N)

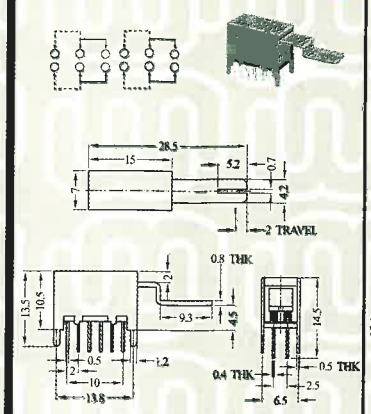

RATING: DC 50V 0.3A

PS-42F05 (N)

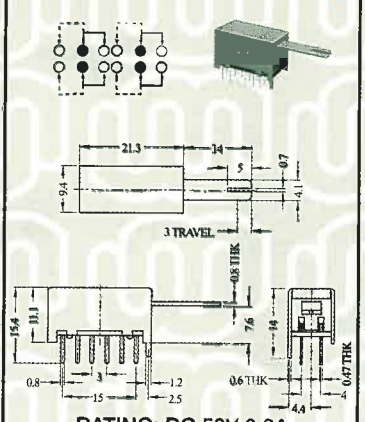

RATING: DC 50V 0.3A

PS-42F09 (N)

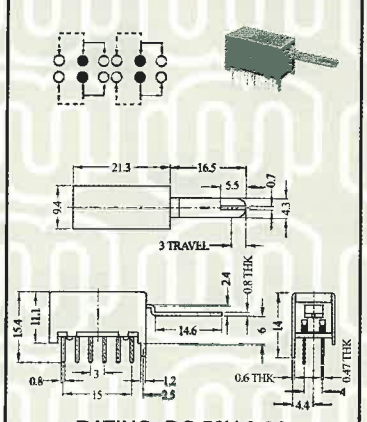

RATING: DC 50V 0.3A

PS-42F15 (N)

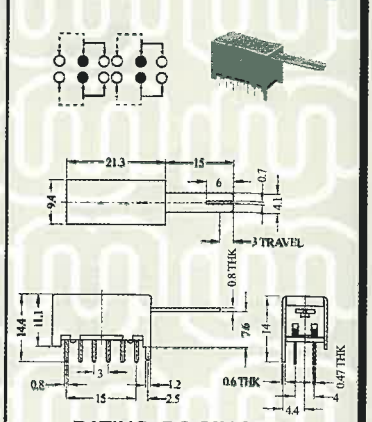

RATING: DC 50V 0.3A

PS-42F01 (N)

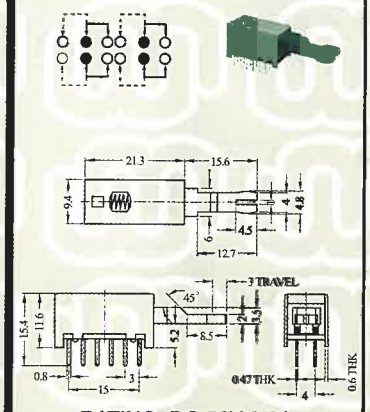

RATING: DC 50V 0.3A

PS-42F06 (N)

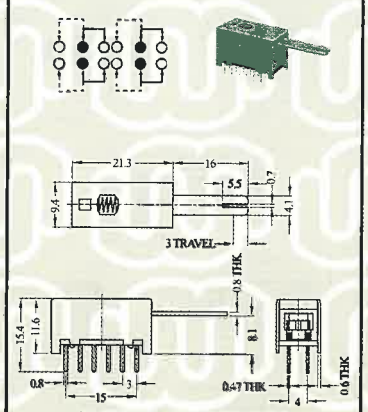

RATING: DC 50V 0.3A

PS-42F10 (N)

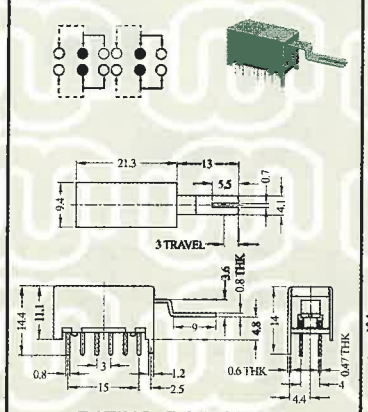

RATING: DC 50V 0.3A

PS-42F16 (N)

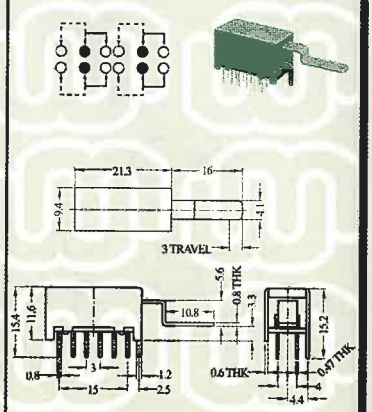

RATING: DC 50V 0.3A

PS-42F02 (N)

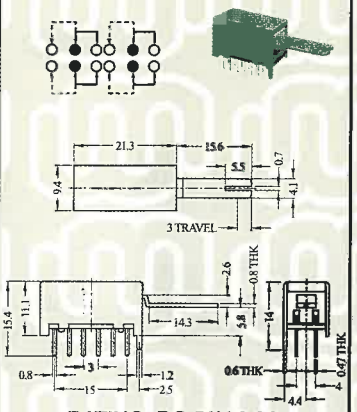

RATING: DC 50V 0.3A

PS-42F07 (N)

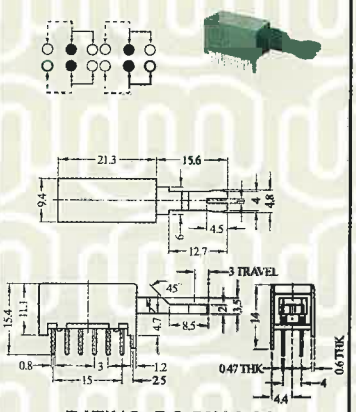

RATING: DC 50V 0.3A

PS-42F11 (N)

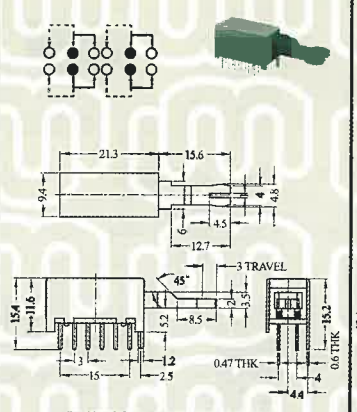

RATING: DC 50V 0.3A

PS-42F17 (N)

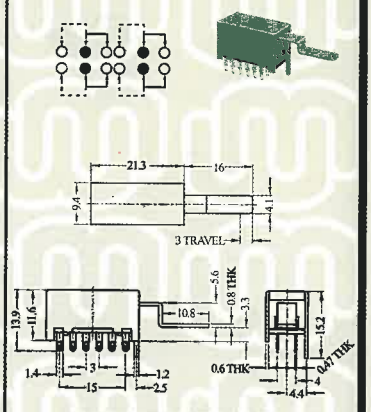

RATING: DC 50V 0.3A

PS-42F03 (N)

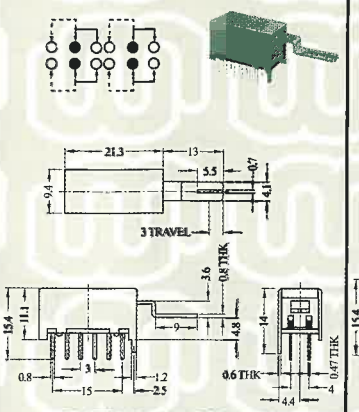

RATING: DC 50V 0.3A

PS-42F08 (N)

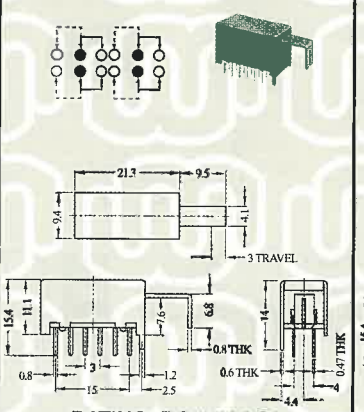

RATING: DC 50V 0.3A

PS-42F13 (N)

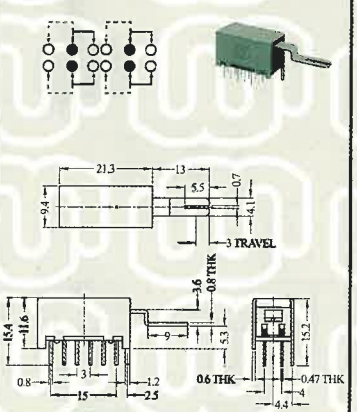

RATING: DC 50V 0.3A

PS-42F21 (N)

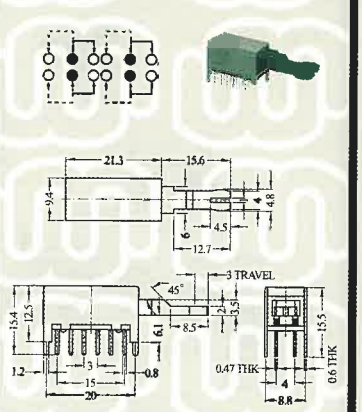

RATING: DC 50V 0.3A

S SHORTING N NON-SHORTING

版權所有 翻印必究 ALL RIGHTS RESERVED

Push Switch

PS-42F23 (N)

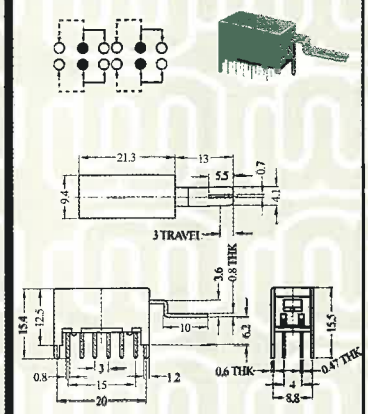

RATING: DC 50V 0.3A

PS-42F42 (N)

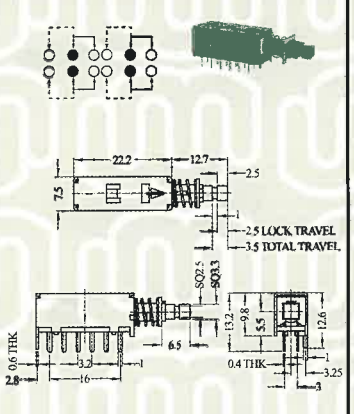

RATING: DC 50V 0.3A

PS-62D03 (S)

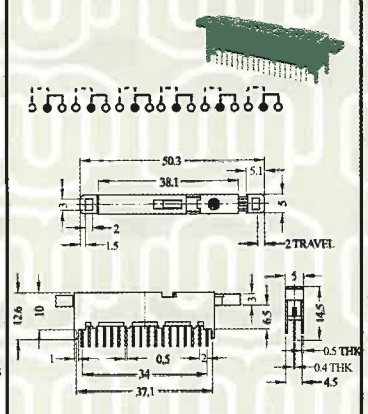

RATING: DC 50V 0.3A

PS-62D11 (S) (N)

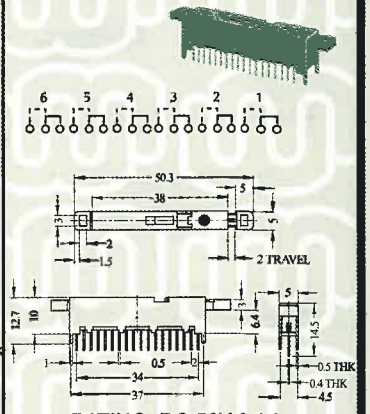

RATING: DC 50V 0.3A

PS-42F25 (N)

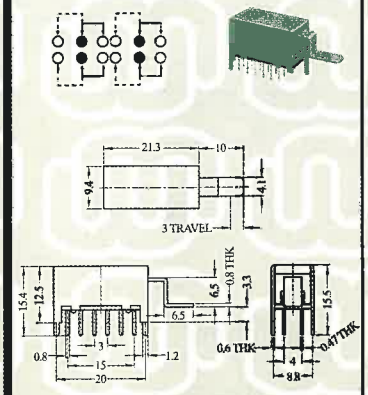

RATING: DC 50V 0.3A

PS-42F45 (N)

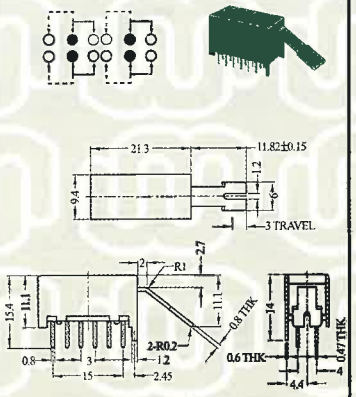

RATING: DC 50V 0.3A

PS-62D05 (N)

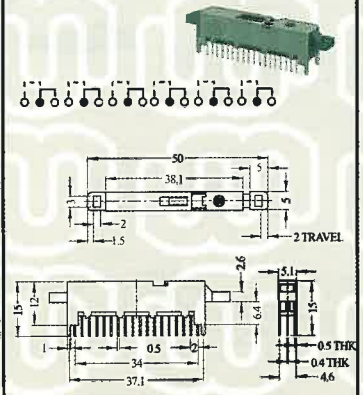

RATING: DC 50V 0.3A

PS-62D12 (S) (N)

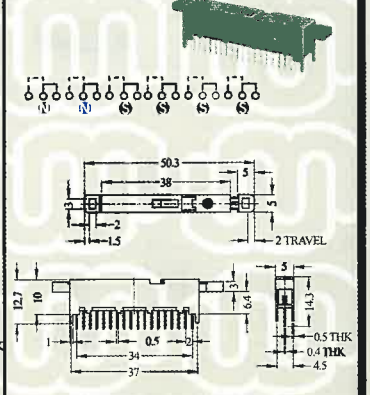

RATING: DC 50V 0.3A

PS-42F26 (N)

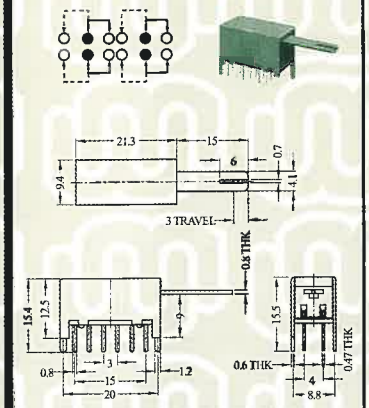

RATING: DC 50V 0.3A

PS-62D01 (N)

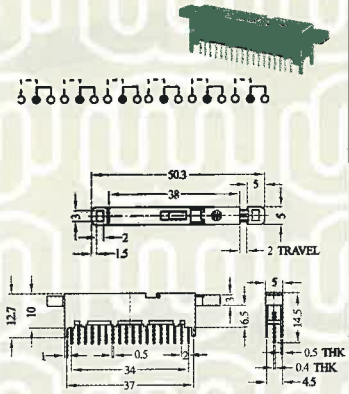

RATING: DC 50V 0.3A

PS-62D08/D18 (S) (N)

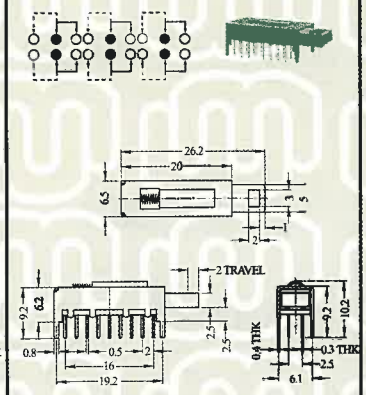

RATING: DC 50V 0.3A

PS-62D13 (S) (N)

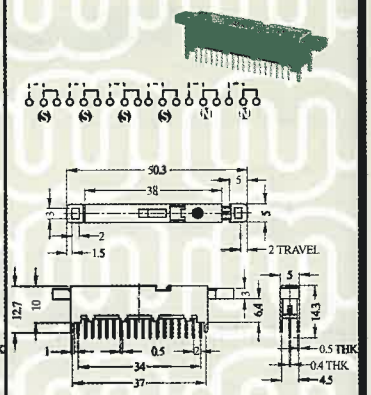

RATING: DC 50V 0.3A

PS-42F31 (N)

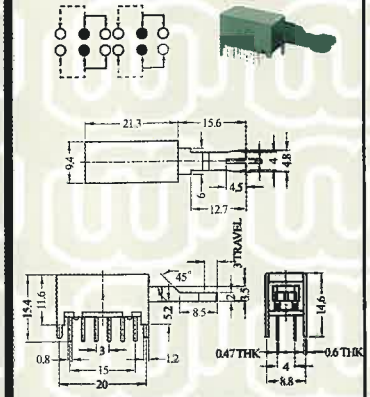

RATING: DC 50V 0.3A

PS-62D02 (S)

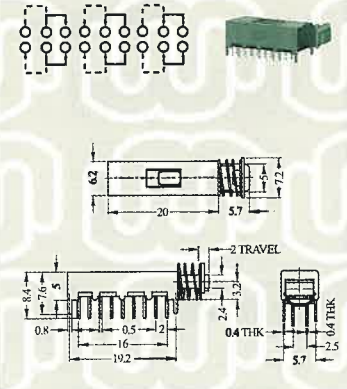

RATING: DC 50V 0.3A

PS-62D09 (S) (N)

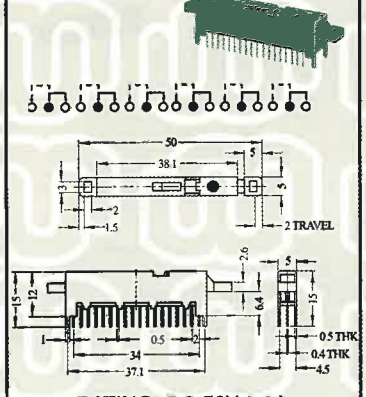

RATING: DC 50V 0.3A

PS-62D14 (N)

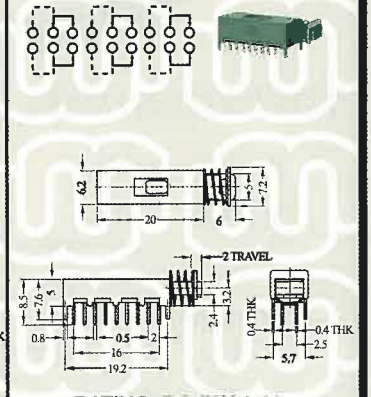

RATING: DC 50V 0.3A

(S) SHORTING (N) NON-SHORTING

版權所有 翻印必究 ALL RIGHTS RESERVED

Push Switch

PS-62D16 (N)

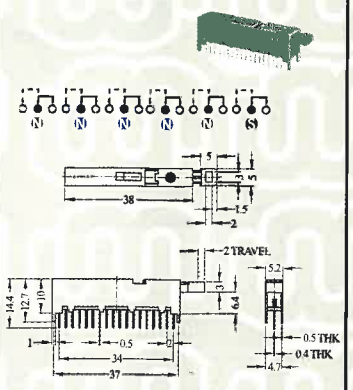

RATING: DC 50V 0.3A

PS-82D02 (S)

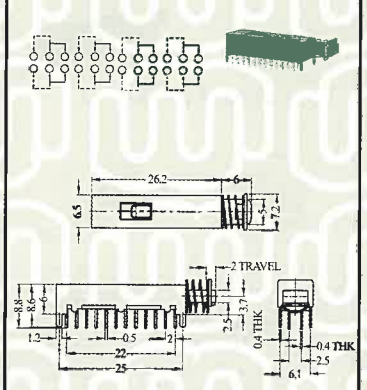

RATING: DC 50V 0.3A

PS-82D16 (N)

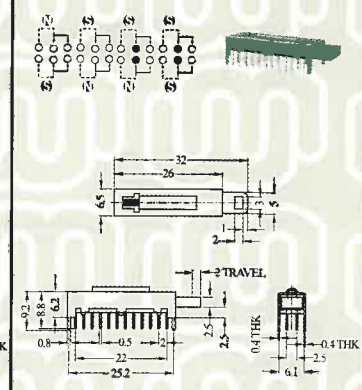

RATING: DC 50V 0.3A

PS-102D03 (N)

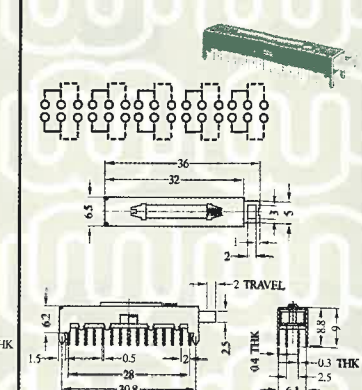

RATING: DC 50V 0.3A

PS-62D20 (S)

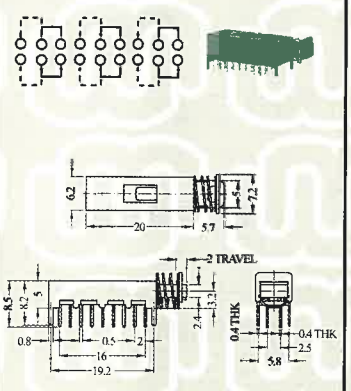

RATING: DC 50V 0.3A

PS-82D03 (S)

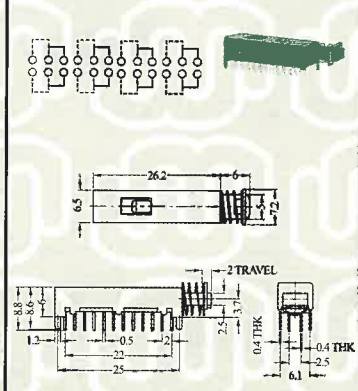

RATING: DC 50V 0.3A

PS-92D01 (N)

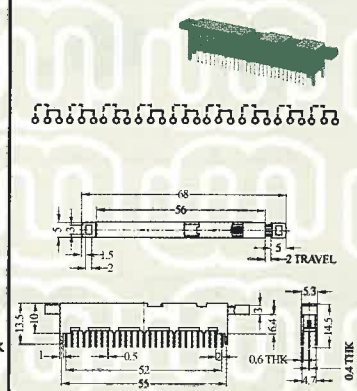

RATING: DC 50V 0.3A

PS-102D05 (S) (N)

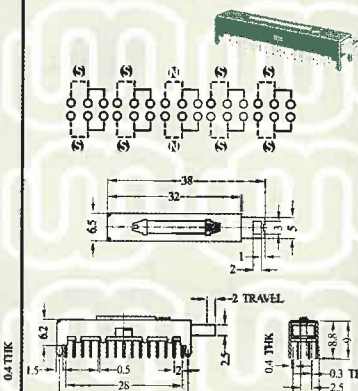

RATING: DC 50V 0.3A

PS-62E01 (N)

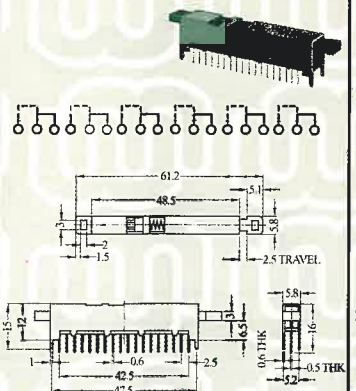

RATING: DC 50V 0.3A

PS-82D04 (N)

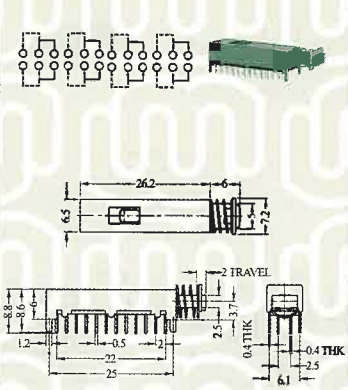

RATING: DC 50V 0.3A

PS-92D04 (S)

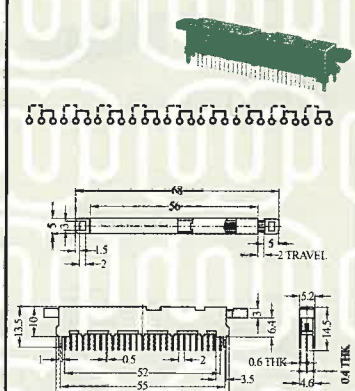

RATING: DC 50V 0.3A

PS-62E03 (S)

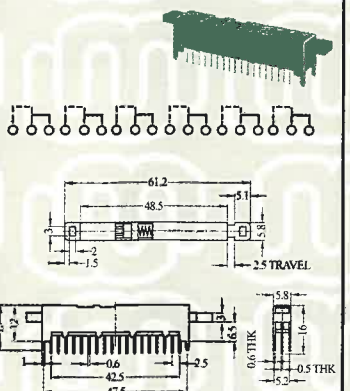

RATING: DC 50V 0.3A

PS-82D06 (N)

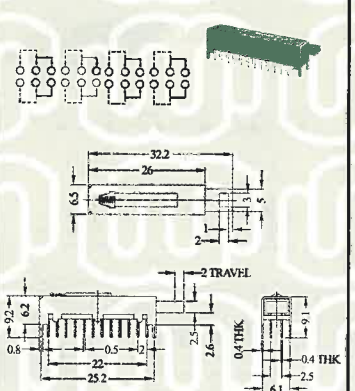

RATING: DC 50V 0.3A

PS-102D02 (N)

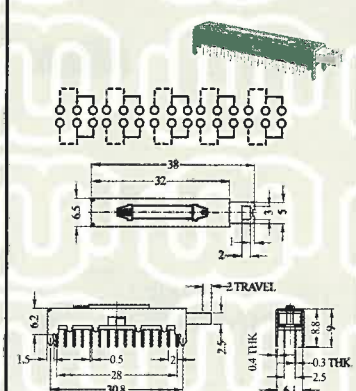

RATING: DC 50V 0.3A

(S) SHORTING (N) NON-SHORTING

版權所有 翻印必究 ALL RIGHTS RESERVED